ROTAX®
AIRCRAFT ENGINES

# MAINTENANCE MANUAL

(LINE MAINTENANCE) FOR ROTAX® ENGINE TYPE 912 SERIES

**Ref. No.: MML-912**

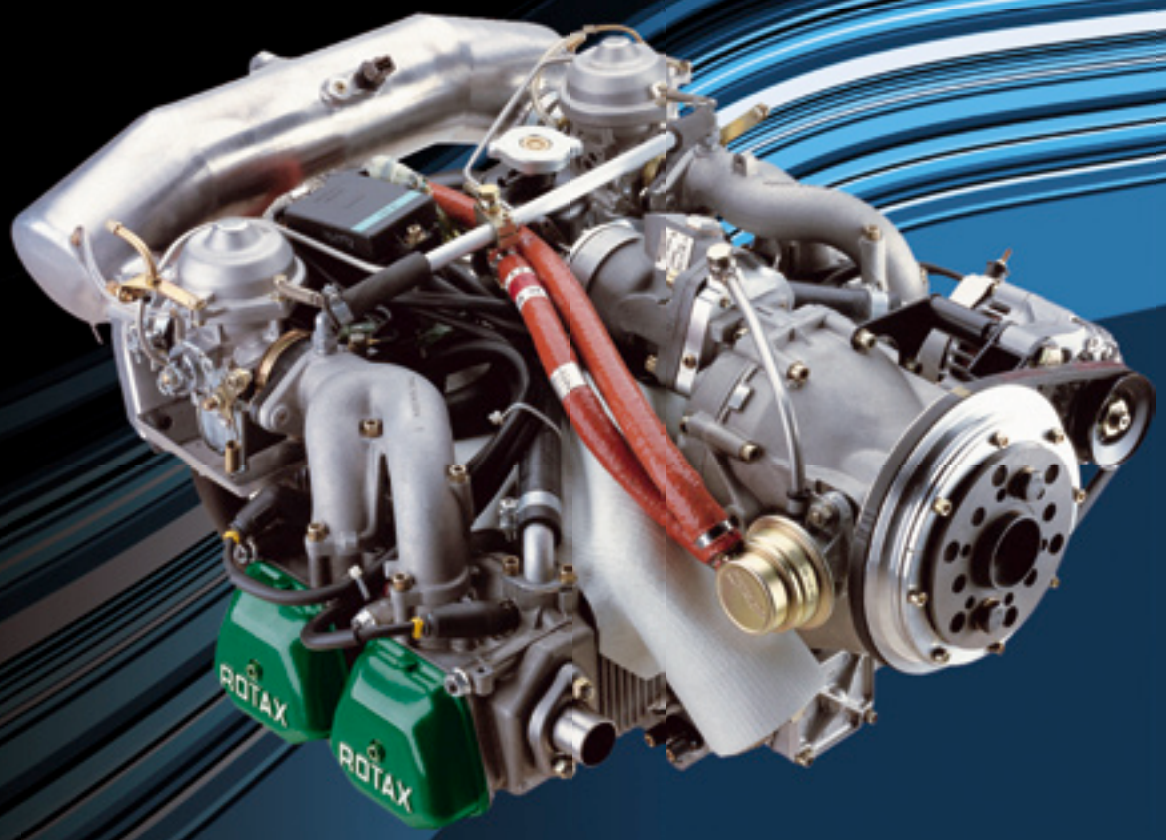


ROTAX® **912 ULS 3** WITH OPTIONS

part no.: 899735

**⚠ WARNING**

**Before starting any maintenance work, please read the Maintenance Manual, as it contains important safety relevant onformation. Failure to do so may result in personal injuries including death. Consult the original equipment manufacturer´s handbook for additional instructions!**



Approval of translation has been done to best knowledge and judgement - in any case the original text in german language is authoritative.

# Chapter: INTRO

## GENERAL NOTE

**Foreword**

Before carrying out maintenance work on the engine, read the Maintenance Manual (Line Maintenance) carefully.

If any passages of the Manual are not clearly understood or if you have questions, please contact an authorized Distribution or Service Center for ROTAX-aircraft engines.

**Chapter structure**

The structure of the Manual follows whenever it is applicable the structure of the ATA (Air Transport Association) standards. The Maintenance Manual is subdivided into the following chapters:

| Subject | Chapter |
|---|---|
| Introduction | Chapter INTRO |
| List of effective pages | Chapter LEP |
| Table of amendments | Chapter TOA |
| General note | Chapter 00-00-00 |
| Airworthiness Limitations | Chapter 04-00-00 |
| Maintenance | Chapter 05-00-00 |
| Time limits | Chapter 05-10-00 |
| Scheduled maintenance checks | Chapter 05-20-00 |
| Unscheduled maintenance checks | Chapter 05-50-00 |
| Maintenance of the systems | Chapter 12-00-00 |
| Replenishing operating fluids | Chapter 12-10-00 |
| Scheduled maintenance | Chapter 12-20-00 |

NOTES

# Chapter: LEP

## LIST OF EFFECTIVE PAGES

| chapter | page | date |
|---|---|---|
| INTRO | Title page | |
| | 1 | 07 01 2010 |
| | 2 | 10 01 2009 |
| LEP | 1 | 07 01 2010 |
| | 2 | 07 01 2010 |
| TOA | 1 | 07 01 2010 |
| | 2 | 10 01 2009 |
| 00-00-00 | 1 | 10 01 2009 |
| | 2 | 10 01 2009 |
| | 3 | 10 01 2009 |
| | 4 | 10 01 2009 |
| | 5 | 10 01 2009 |
| | 6 | 10 01 2009 |
| | 7 | 10 01 2009 |
| | 8 | 10 01 2009 |
| | 9 | 10 01 2009 |
| | 10 | 10 01 2009 |
| | 11 | 10 01 2009 |
| | 12 | 10 01 2009 |
| | 13 | 10 01 2009 |
| | 14 | 10 01 2009 |
| | 15 | 10 01 2009 |
| | 16 | 10 01 2009 |
| 04-00-00 | 1 | 07 01 2010 |
| | 2 | 07 01 2010 |
| 05-00-00 | 1 | 10 01 2009 |
| | 2 | 10 01 2009 |
| | 3 | 10 01 2009 |
| | 4 | 10 01 2009 |
| | 5 | 10 01 2009 |
| | 6 | 10 01 2009 |
| | 7 | 10 01 2009 |
| | 8 | 10 01 2009 |
| | 9 | 10 01 2009 |
| | 10 | 10 01 2009 |

| chapter | page | date |
|---|---|---|
| 05-10-00 | 1 | 10 01 2009 |
| | 2 | 10 01 2009 |
| | 3 | 10 01 2009 |
| | 4 | 10 01 2009 |
| | 5 | 10 01 2009 |
| | 6 | 10 01 2009 |
| | 7 | 10 01 2009 |
| | 8 | 10 01 2009 |
| 05-20-00 | 1 | 10 01 2009 |
| | 2 | 10 01 2009 |
| | 3 | 10 01 2009 |
| | 4 | 10 01 2009 |
| | 5 | 10 01 2009 |
| | 6 | 10 01 2009 |
| | 7 | 10 01 2009 |
| | 8 | 10 01 2009 |
| | 9 | 10 01 2009 |
| | 10 | 10 01 2009 |
| | 11 | 10 01 2009 |
| | 12 | 10 01 2009 |
| | 13 | 10 01 2009 |
| | 14 | 10 01 2009 |
| | 15 | 10 01 2009 |
| | 16 | 10 01 2009 |
| | 17 | 10 01 2009 |
| | 18 | 10 01 2009 |
| 05-50-00 | 1 | 10 01 2009 |
| | 2 | 10 01 2009 |
| | 3 | 10 01 2009 |
| | 4 | 10 01 2009 |
| | 5 | 10 01 2009 |
| | 6 | 10 01 2009 |
| | 7 | 10 01 2009 |
| | 8 | 10 01 2009 |
| | 9 | 10 01 2009 |
| | 10 | 10 01 2009 |
| | 11 | 10 01 2009 |
| | 12 | 10 01 2009 |
| | 13 | 10 01 2009 |
| | 14 | 10 01 2009 |
| | 15 | 10 01 2009 |
| | 16 | 10 01 2009 |

d04860.fm

| chapter | page | date |
|---|---|---|
| 05-50-00 | 17 | 10 01 2009 |
| | 18 | 10 01 2009 |
| | 19 | 10 01 2009 |
| | 20 | 10 01 2009 |
| | 21 | 10 01 2009 |
| | 22 | 10 01 2009 |
| | 23 | 10 01 2009 |
| | 24 | 10 01 2009 |
| 12-00-00 | 1 | 10 01 2009 |
| | 2 | 10 01 2009 |
| 12-10-00 | 1 | 10 01 2009 |
| | 2 | 10 01 2009 |
| | 3 | 10 01 2009 |
| | 4 | 10 01 2009 |
| | 5 | 10 01 2009 |
| | 6 | 10 01 2009 |
| | 7 | 10 01 2009 |
| | 8 | 10 01 2009 |
| | 9 | 10 01 2009 |
| | 10 | 10 01 2009 |
| 12-20-00 | 1 | 10 01 2009 |
| | 2 | 10 01 2009 |
| | 3 | 10 01 2009 |
| | 4 | 10 01 2009 |
| | 5 | 10 01 2009 |
| | 6 | 10 01 2009 |
| | 7 | 10 01 2009 |
| | 8 | 10 01 2009 |
| | 9 | 10 01 2009 |
| | 10 | 10 01 2009 |
| | 11 | 10 01 2009 |
| | 12 | 10 01 2009 |
| | 13 | 10 01 2009 |
| | 14 | 10 01 2009 |
| | 15 | 10 01 2009 |
| | 16 | 10 01 2009 |
| | 17 | 10 01 2009 |
| | 18 | 10 01 2009 |
| | 19 | 10 01 2009 |
| | 20 | 10 01 2009 |
| | 21 | 10 01 2009 |
| | 22 | 10 01 2009 |
| | 23 | 10 01 2009 |
| | 24 | 10 01 2009 |
| | 25 | 10 01 2009 |
| | 26 | 10 01 2009 |

| chapter | page | date |
|---|---|---|
| | 27 | 10 01 2009 |
| | 28 | 10 01 2009 |
| | 29 | 10 01 2009 |
| | 30 | 10 01 2009 |
| | 31 | 10 01 2009 |
| | 32 | 10 01 2009 |
| | 33 | 10 01 2009 |
| | 34 | 10 01 2009 |
| | 35 | 10 01 2009 |
| | 36 | 10 01 2009 |
| | 37 | 10 01 2009 |
| | 38 | 10 01 2009 |
| | 39 | 10 01 2009 |
| | 40 | 10 01 2009 |
| | 41 | 10 01 2009 |
| | 42 | 10 01 2009 |
| | 43 | 10 01 2009 |
| | 44 | 10 01 2009 |
| | 45 | 10 01 2009 |
| | 46 | 10 01 2009 |
| | 47 | 10 01 2009 |
| | 48 | 10 01 2009 |
| | 49 | 10 01 2009 |
| | 50 | 10 01 2009 |
| | 51 | 10 01 2009 |
| | 52 | 10 01 2009 |
| | 53 | 10 01 2009 |
| | 54 | 10 01 2009 |
| | 55 | 10 01 2009 |
| | 56 | 10 01 2009 |
| | 57 | 10 01 2009 |
| | 58 | 10 01 2009 |
| | 59 | 10 01 2009 |
| | 60 | 10 01 2009 |
| | 61 | 10 01 2009 |
| | 62 | 10 01 2009 |
| | 63 | 10 01 2009 |
| | 64 | 10 01 2009 |
| | 65 | 10 01 2009 |
| | 66 | 10 01 2009 |
| | 67 | 10 01 2009 |
| | 68 | 10 01 2009 |
| | 69 | 10 01 2009 |
| | 70 | 10 01 2009 |
| | Rear page | |

*d04860.fm*

# Chapter: TOA

## TABLE OF AMENDMENTS

***Approval**

The technical content of this document is approved under the authority of DOA No. EASA.21J.048.

Note: THE APPROVAL IS GIVEN TO ALL CHAPTERS EXCEPT THE AIRWORTHINESS LIMITATIONS SECTION 04-00-00 WHICH IS SUBJECT TO SPECIFIC APPROVAL OF THE EASA.

| no. | chapter | page | date of change | remark for approval | date of approval from authorities | date of issue | signature |
|---|---|---|---|---|---|---|---|
| 0 | INTRO | all | 10 01 2009 | DOA* | | | |
| 0 | LEP | all | 10 01 2009 | DOA* | | | |
| 0 | TOA | all | 10 01 2009 | DOA* | | | |
| 0 | 00-00-00 | all | 10 01 2009 | DOA* | | | |
| 0 | 05-00-00 | all | 10 01 2009 | DOA* | | | |
| 0 | 05-10-00 | all | 10 01 2009 | DOA* | | | |
| 0 | 05-20-00 | all | 10 01 2009 | DOA* | | | |
| 0 | 05-50-00 | all | 10 01 2009 | DOA* | | | |
| 0 | 12-00-00 | all | 10 01 2009 | DOA* | | | |
| 0 | 12-10-00 | all | 10 01 2009 | DOA* | | | |
| 0 | 12-20-00 | all | 10 01 2009 | DOA* | | | |
| 1 | INTRO | 1 | 07 01 2010 | DOA* | | | |
| 1 | LEP | 1-2 | 07 01 2010 | DOA* | | | |
| 1 | TOA | 1 | 07 01 2010 | DOA* | | | |
| 1 | 04-00-00 | all | 07 01 2010 | EASA approved | | | |

d04861.fm

NOTES

# Chapter: 00-00-00

## GENERAL NOTE

**Introduction**

This section describes this maintenance of engine type ROTAX 912 Series.

NOTES: The ROTAX 912 Series includes all engines such as the 912 A, 912 F, 912 S, 912 UL, 912 ULS and 912 ULSFR.

**Table of contents**

This chapter of the Maintenance Manual contains general and safety information concerning the operation of the aircraft engine.



d02873.fm

NOTES

## 1) General note

**Purpose**

The purpose of this Maintenance Manual is to acquaint maintenance service staff approved by the local aviation authorities with some basic maintenance and safety information for service work.

**Documentation**

For more detailed information regarding, maintenance, safety- or flight operation, consult the documentation provided by the aircraft manufacturer and/or dealer.

For additional information on engines, maintenance or parts, you can also contact your nearest authorized ROTAX-aircraft engine distributor.

**ROTAX Distributors**

ROTAX Authorized Distributors for Aircraft Engines.

See latest Operators Manual or on the Internet at the official Homepage www.rotax-aircraft-engines.com.

**Engine serial number**

When making inquiries or ordering parts, always indicate the engine serial number, as the manufacturer makes modifications to the engine for product improvement. The engine number (1) is on the ignition cover, on the left, opposite the electric starter. See Fig. 1.

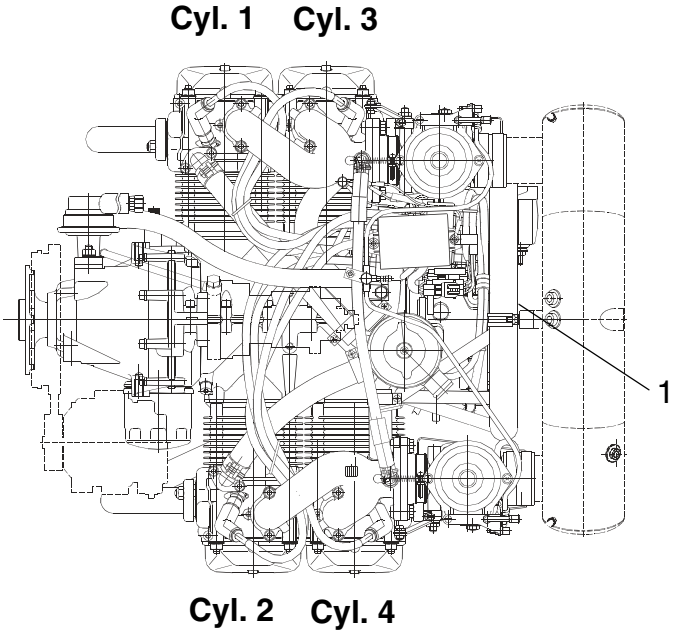


*Fig. 1* 07902

d02873.fm

NOTES

## 2) Abbreviations and terms used in this Manual

### Abbreviations

| Abbreviation | Description |
|---|---|
| * | Reference to another section |
| ⊕ | center of gravity |
| 💧 | The drop symbol indicates use of sealing agents, adhesives or lubricants. (only in the Illustrated Parts Catalog) |
| °C | Degrees Celsius (Centigrade) |
| °F | Degrees Fahrenheit |
| rpm | Revolutions per minute |
| 912 A | see OM (Type designation) |
| 912 F | see OM (Type designation) |
| 912 S | see OM (Type designation) |
| 912 UL | see OM (Type designation) |
| 912 ULS | see OM (Type designation) |
| 912 ULSFR | 912 ULS Version France |
| 914 F | see OM (Type designation) |
| 914 UL | see OM (Type designation) |
| A | Ampere |
| A/C | Aircraft |
| A/F | Across-flat dimension |
| ASB | Alert Service Bulletin |
| ACG | Austro Control GmbH |
| API | American Petrol Institute |
| ASTM | American Society for Testing and Materials |
| ATA | Air Transport Association |
| CAN/CGSB | Canadian General Standards Board |
| CSA | Constant Speed Actuator |
| CW | Clockwise |
| CCW | Counter-clockwise |
| DCDI | Dual Capacitor Discharge Ignition |
| DOT | Department of Transport |
| DOA | Design Organisation Approval |
| EASA | European Aviation Safety Agency |
| IM | Installation Manual |
| ECU | Engine Control Unit |
| EGT | Exhaust Gas Temperature |
| INTRO | Introduction |
| EMS | Engine Management System |

| Abbreviation | Description |
|---|---|
| EN | European Norm |
| IPC | Illustrated Parts Catalog |
| FAA | Federal Aviation Administration |
| FAR | Federal Aviation Regulation |
| OM | Overhaul Manual |
| hr. | hours |
| OM | Operators Manual |
| TOC | Table of Contents |
| ISA | International Standard Atmosphere |
| kg | kilograms |
| AD | Airworthiness Directive |
| MS | magneto side |
| MON | motor octane number |
| N | new part (only Illustrated Parts Catalog) |
| nB | as necessary (only Illustrated Parts Catalog) |
| n.a. | not available |
| NDT | non-destructive testing |
| Nm | newton meter |
| PSU | power supply unit |
| Rev. | Revision |
| ROTAX | is a trade mark of BRP-Powertrain GmbH & Co KG |
| RON | Research Octane Number |
| RV | Record of Revisions |
| s.v. | still valid (only IPC) |
| S/N | Serial Number |
| SB | Service Bulletin |
| SI | Service Instruction |
| SL | Service Letter |
| SMD | Surface Mounted Devices |
| part no. | Part number |
| TSN | Time Since New |
| TSO | Time Since Overhaul |
| V | Volt |
| VFR | Visual Flight Rules |
| LEP | List of Effective Pages |
| MM | Maintenance Manual |
| XXX | shows the serial component number |

d02873.fm

## 2.1) Conversion table

**Units of length:**

1 mm = 0.03937 in
1 in = 25,4 mm
1 ft = 12 in
= 0,3048 m

**Units of power:**

1 kW = 1.341 hp
1 hp = 0,7457 kW
1 kW = 1,3596 PS
1 PS = 0,7355 kW

**Units of area:**

1 $cm^2$ = 0.155 sq in ($in^2$)
1 sq in ($in^2$) = 6,4516 $cm^2$

**Units of temperature:**

K = °C - 273,15
°C = (°F - 32) / 1,8
°F = (°C x 1,8) + 32

**Units of volume:**

1 $cm^3$ = 0.06102 cu in ($in^3$)
1 cu in ($in^3$) = 16,3871 $cm^3$ ($in^3$)
1 $dm^3$ = 1 l
1 $dm^3$ = 0.21997 gal (UK)
1 gal (UK) = 4,5461 $dm^3$
1 $dm^3$ = 0.26417 gal (US)
1 gal (US) = 3,7854 $dm^3$

**Units of velocity:**

1 m/s = 3,6 km/h
1 ft/min = 0,3048 m/min
= 0,00508 m/sec
1 m/s = 196.85 ft/min
1 kt = 1,852 km/h
1 km/h = 0,53996 kn

**Units of mass:**

1 kg = 2.2046 lb
1 lb = 0,45359 kg

**spec. fuel consumption:**

1 g/kWh = 0.001644 lb/hph
1 lb/hph = 608,277 g/kWh

**Density:**

1 $g/cm^3$ = 0.016018 $lb/ft^3$
1 $lb/ft^3$ = 62,43 $g/cm^3$

**Units of torque:**

1 Nm = 0.737 ft lb
= 8.848 in lb
1 ft lb = 1.356 Nm
1 in lb = 0.113 Nm

**Units of force:**

1 N = 0.224809 lbf
1 lbf = 4.4482 N

**Cable cross-section:**
**Conversion table - Wire Gauge:**
**AWG-$mm^2$**

| AWG | 4 | 6 | 8 | 10 | 12 | 14 | 16 | 18 | 20 |
|---|---|---|---|---|---|---|---|---|---|
| $mm^2$ | 21 | 13 | 8,4 | 5,3 | 3,3 | 2,1 | 1,3 | 0,8 | 0,52 |

**Units of pressure:**

1 Pa = 1N/$m^2$
1 bar = 100 000 Pa (1000 hPa)
1 bar = 14.5037 lbf/$in^2$ (psi)
1 lbf/$in^2$ (psi) = 0,0689 bar
1 in Hg = 33.8638 hPa

NOTES

## 3) Safety notice

**General note**

Although the reading of such information does not eliminate the hazard, understanding the information will promote its correct use. Always use common workshop safety practice.

The information and components-/system descriptions contained in this Manual are correct at the time of publication. BRP-Powertrain, however, maintains a policy of continuous improvement of its products without imposing upon itself any obligation to install them on its products previously manufactured.

**Revision**

BRP-Powertrain reserves the right at any time, and without incurring obligation, to remove, replace or discontinue any design, specification, feature or otherwise.

**Measure**

Specifications are given in the SI metric system with the USA equivalent in parenthesis.

**Symbols used**

This Manual uses the following symbols to emphasize particular information. This information is important and must be observed.

| | |
|---|---|
| ⚠ WARNING | **Identifies an instruction which, if not followed, may cause serious injury including the possibility of death.** |
| ⚠ CAUTION | **Identifies an instruction which, if not followed, may cause minor or moderate injury.** |
| *NOTICE* | **Denotes an instruction which, if not followed, may severely damage the engine or other component.** |
| NOTES: | **Indicates supplementary information which may be needed to fully complete or understand an instruction.** |
| I | **A revision bar outside of the page margin indicates a change to text or graphic.** |

*d02873.fm*

## 3.1) Safety notice

**General note**

This information relates to the preparation and use of ROTAX aircraft engines and has been utilized safely and effectively by BRP-Powertrain. However, BRP-Powertrain disclaims liability for all damage and/or injuries resulting from the improper use of the contents. BRP-Powertrain strongly recommend that any service be carried out and/or verified by a highly skilled professional mechanic
See chap. 05-00-00 section 1.2)

**Manual**

This Manual has been prepared as a guide to correctly service and maintain all ROTAX 912 aircraft engines.

This edition was primarily published to be used by aircraft mechanics who are already familiar with all service procedures relating to ROTAX aircraft engines.

This Manual uses technical terms which may be slightly different from the ones used in the Illustrated Parts Catalog.

It is understood that this Manual may be translated into another language. In the event of any discrepancy the German version prevails.

**Warning**

It is your responsibility to be completely familiar with the safety instructions including warnings and cautions described in this Manual. These warnings and cautions advise of specific operating and servicing methods that, if not observed, can cause a serious engine malfunction or cause the engine to lose power in flight which can result in loss of life, injury or damage to equipment.

It is, however, important to understand that these warnings and cautions are not exhaustive. BRP-Powertrain could not possibly know, evaluate and advise the user of all conceivable ways in which service might be done or of the possible hazardous consequences of each way.

**Safety instruction**

In addition to observing the instructions in our Manual, general safety and accident preventative measures, legal regulations and regulations of any aeronautical authority must be observed.

Where differences exist between this Manual and regulations provided by any authority, the more stringent regulation should be applied.

**Illustration**

The content depicts parts and/or procedures applicable to the particular product at its time of manufacture. It does not include dealer modifications, whether authorized or not by BRP-Powertrain, after manufacturing the product.

**Locking devices**

Locking devices (e.g. locking tab, self-locking fasteners, etc.) must be installed or replaced with new ones, where specified. If the efficiency of a locking device is impaired, it must be replaced.

**Torque wrench tightening**

***NOTICE*** If not specified otherwise, the threads are not lubricated when fastened.

Torque wrench tightening specifications must be strictly adhered to.

## 3.2) Instruction

**General note**

Engines require instructions regarding their application, use, operation, maintenance and repair.

Technical documentation and directions are useful and necessary complementary elements for personal instruction, but can by no means substitute theoretical and practical instructions.

These instructions should cover explanation of the technical context, advice for operation, maintenance, use and operational safety of the engine.

**Safety notice**

In this technical Manual passages concerning safety are especially marked. Pass on safety warnings to other users!

**Accessories**

This engine must only be operated with accessories supplied, recommended and released by BRP-Powertrain. Modifications are only allowed after consent by the engine manufacturer.

**Spare parts**

***NOTICE***

Spare parts must meet with the requirements defined by the engine manufacturer. This is only warranted by use of GENUINE ROTAX spare parts and/or accessories (see IPC) or suitable equivalent in the manufacturer's opinion otherwise, any limited warranty by BRP-Powertrain is null and void (see Warranty Conditions). Spare parts are available at the authorized ROTAX Distribution- and Service Center.
Any warranty by BRP-Powertrain becomes null and void if spare parts and or accessories other than GENUINE ROTAX spare parts and/or accessories are used (see latest Warranty Conditions).

**Tools**

***NOTICE***

In principle use only tools and appliances which are either cited in the Manual or in the Illustrated Parts Catalog.

**Standstill**

After engine standstill (longer than 2 months) observe without fail the instructions for engine "out of use". Protect fuel- and carburetor system against contamination.

**Returning**

When returning the engine or its components (e.g. propeller gearbox) to an authorized overhaul or repair company, ensure that the necessary documentation (log book, maintenance records etc.) are enclosed.

*d02873.fm*

## 3.3) Maintenance Concept

**General note**

The maintenance functions detailed in this Manual fall into two categories:

- Maintenance I (Line Maintenance)
- Maintenance II (Heavy Maintenance)

Repairs beyond the levels detailed in this Manual are not recommended as maintenance functions and must be done by an authorized overhaul facility.

---

**Maintenance I (Line Maintenance)**

Chapter 00,05 and 12

The scope of line maintenance consists of removal, installation and adjustment of engine components (including part wear). All procedures in this Manual are to be considered line maintenance.

NOTES: Where applicable, you will be referred to the Heavy Maintenance Manual for work above and beyond line maintennace.

---

**Maintenance II (Heavy Maintenance)**

separate Manual

Maintenance Manual II details removal, installation and repair of components or parts normally considered beyond the capabilities of the "Line Maintenance".

NOTES: This Manual can **only** be used in combination with Maintenance Manual I (Line Maintenance), as it builds up on it.

---

## 3.4) Technical documentation

**General note**

These documents form the instructions ensuring continued airworthiness of ROTAX aircraft engines.

The information contained is based on data and experience that are considered applicable for skilled mechanics under normal conditions.

Due to the fast technical progress and fulfilment of particular specifications of the customers it may occur that existing laws, safety prescriptions, constructional and operational regulations cannot be transferred completely to the object bought, in particular for special constructions, or may not be sufficient.

**Documentation**

- Installation Manual
- Operators Manual
- Maintenance Manual (Line and Heavy Maintenance)
- Overhaul Manual
- Illustrated Parts Catalog
- Alert Service Bulletin
- Service Bulletin
- Service Instruction
- Service Letter

**Status**

The status of the Manuals can be determined with the aid of the table of amendments. The first column indicates the revision state. This figure should be compared with the revision provided on ROTAX-WebSite: www.rotax-aircraft-engines.com. Amendments and current versions can be downloaded free of charge.

**Replacement pages**

Furthermore the Manual is constructed in such a way that single pages can be replaced instead of the complete document. The list of effective pages is given in the chapter LEP. The particular edition and revision number is given on the footer of each page.
Amendments and current versions can be downloaded free of charge.

**Reference**

Any reference to a document refers to the latest edition issued by BRP-Powertrain, if not stated otherwise.

**Illustrations**

The illustrations in this Manual are mere sketches and show a typical arrangement. They may not represent in full detail or the exact shape of the parts which have the same or similar function. Therefore deduction of dimensions or other details from illustrations is not permitted.

NOTES: The Illustrations and Documents in this Manual are stored in a document data file/graphic data file and are provided with a consecutive irrelevant number.

This number (e.g. 00277) is of no significance for the content.

## 3.5) Use for intended purpose

**General note**

**⚠WARNING** Explosion hazard.
Bursting off parts can cause serious injuries. Never run the engine without propeller.

**Use**

The engine ROTAX 912 A/F/S is intended for use in certified aircraft. In case of doubt the regulations of the national authorities or the respective sportive federations have to be observed.

**Certified engine**

Certified aircraft engine ROTAX 912 A/F/S is tested as per aeronautical standards for safety and time between overhaul. It was developed to conform to the latest technological standards and rigorously tested.

**Non certified engine**

Engine ROTAX 912 UL/ULS/ULSFR is not certified. These engines have not received any aeronautical standards or regulatory safety or durability testing, and conform to no aircraft standards. These engines are for use in experimental, uncertificated aircraft and vehicles only in which an engine failure will not compromise safety.

NOTES: These engines are technically equivalent to certified engines and have been manufactured by BRP-Powertrain using the same quality assurance system.

**Engine stoppage**

The operator assumes all risk of use, and acknowledges by this use that he/she knows this engine is subject to sudden stoppage.

**Maintenance and repair conditions**

Use for intended purpose also includes observation of the operational, maintenance and repair conditions prescribed by the manufacturer. This is a crucial factor concerning the reliability of the engine and can increase the durability of the engine.

# Chapter: 04-00-00

## AIRWORTHINESS LIMITATIONS

**Approval**

THE AIRWORTHINESS LIMITATIONS SECTION IS APPROVED BY THE EUROPEAN AVIATION SAFETY AGENCY (EASA) IN ACCORDANCE WITH PART 21A.31(a)(3) AND FAR 33.4. ANY CHANGE TO EACH MANDATORY REPLACEMENT TIME, INSPECTION INTERVAL, AND RELATED PROCEDURE CONTAINED IN THIS AIRWORTHINESS LIMITATIONS SECTION MUST ALSO BE APPROVED.

| no. | chapter | page | date of change | remark for approval | date of approval from authorities | date of issue | signature |
|---|---|---|---|---|---|---|---|
| 1 | 04-00-00 | all | 07 01 2010 | EASA approved | | | |

**Introduction**

This chapter 04-00-00 provides information about “Airworthiness Limitations“.

**Airworthiness Limitations**

- **NONE**

For the ROTAX type engine 912 Series the airworthiness limitations are not applicable.

NOTES: Regarding engine operating limitations see the relevant chapter “limits of operation“ in the relevant Operators Manual.

Maintenance checks and replacement of defined components are required on this engine! These procedures are descriped in chapter 05 and are a required by the authority in order to ensure the Continued Airworthiness!

See chap. 05-00-00.

**Continued Airworthiness**

Scheduled inspections of the engine including replacement and overhaul of defined components are required in order to ensure the Continued Airworthiness of ROTAX aircraft engines.

d04862.fm

NOTES

# Chapter: 05-00-00

# MAINTENANCE

**Introduction**

The information given in the Maintenance Manual is based on data and experience which are considered to be applicable for a skilled aviation mechanic under normal working conditions

**Table of contents**

In this chapter the maintenance of engine ROTAX 912 Series is described. The description is subdivided into sections and description of function of the various systems. Some overlapping maintenance instructions are treated as generally valid information at the beginning of this section.

NOTES

# 1) Maintenance

## 1.1) General note

**Safety notice**

**⚠WARNING** Non-compliance can result in serious injuries or death! Besides our instructions in the documentation supplied, also respect the generally valid safety and accident preventive directives and legal regulations.

**Procedures and limits**

The procedures and limits in this Manual constitute the manufacturers official recommendation for engine maintenance and operation.

**Instruction**

The guidelines given in the Maintenance Manual are useful and necessary supplements to training. They, however, cannot substitute competent theoretical and practical personal instruction.

**Modifications**

Non-authorized modifications as well as the use of components and auxiliary components not corresponding to the installation instructions exclude any liability of the engine manufacturer.

**Parts and accessories**

We particularly emphasize that parts and accessories not supplied as genuine BRP-Powertrain parts are not verified for suitability by BRP-Powertrain and thus are not authorized for use. Installation and/or use of such products may possibly change or negatively influence the constructive characteristics of the engine. For damages resulting from use of non-genuine parts and accessories manufacturer refuses any liability.

**Special tools**

Maintenance of engines and systems requires special knowledge and special tools. Use only the special tools recommended by BRP-Powertrain when disassembling and assembling the engine.

## 1.2) Authorized personnel

**General note**

It is a requirement that all organizations or individuals possess the required special tooling, training or experience to perform all tasks outlined.

**Type-specific training**

Any task outlined herein may be performed if the organization or individual has met the following conditions:

| **Requisite knowledge of the task as a result of:** |
|---|
| - Type-specific training (for the applicable ROTAX aircraft engine) which is approved by the national aviation authority and/or BRP-Powertrain. |
| **or** |
| - Experience in performing the task **and**<br>- Formal instruction from a BRP-Powertrain authorized training facility **or**<br>- “On-the-job“ instruction by a BRP-Powertrain or authorized BRP-Powertrain Distributor representative. |
| **Including:** |
| - Suitable work environment to prevent contamination or damage to engine parts or modules.<br>- Suitable tools and fixtures as outlined in the ROTAX Maintenance Manual.<br>- Reasonable and prudent maintenance practices are utilized.<br>- And the Requirements of the applicable regulatory authority regarding maintenance procedures are met. |

**Information**

Maintenance organizations and individuals are encouraged to contact BRP-Powertrain through its worldwide distribution network for information and guidance on any of the tasks outlined herein.
See chap. 00-00-00 section: 3.4).

## 1.3) Procedure notes

**General note**

**⚠WARNING** Non-compliance can result in serious injuries or death! When carrying out maintenance and service work, respect without fail the safety regulations.

**Ignition "OFF"**

**⚠WARNING** Non-compliance can result in serious injuries or death! This precautionary measure serves to avoid any injuries in case of an unintentional start of the engine. Principally ensure the following at **each maintenance event**
- Ignition "**OFF**" and system grounded,
- Disconnect battery

and secure engine against unintentional operation.

**Ignition "ON"**

**⚠WARNING** Risk of electric shock! The ignition is **switched on**, as long as the ground-cable (P lead) is not properly connected to ground.

At maintenance work which requires ignition "ON" and battery connected, take care of the following:

- Secure the propeller against unintentional turning by hand and
- secure and observe propeller zone

**Handling of operating fluids**

**⚠WARNING** Failure to comply with this instruction may cause severe burns or scalding! Hot engine parts! Allways allow the engine to cool down to ambient temperature before starting work.

At maintenance of cooling-, lubricating and fuel system take care without fail that no contamination, metal chips, foreign material and/or dirt enters the system.

**Disassembly**

At disassembly of the engine, mark the components as necessary to avoid any mix-up. Take care of these marks, don't ruin them.

**Tool**

**NOTICE** In order to avoid mechanical damages, never loosen or tighten screws and nuts with pliers but only with the specified tools.

**Safety wiring**

**NOTICE** If during disassembling/reassembling the removal of a safety item (e.g. safety wiring, self-locking fastener, etc.) should be necessary, it must be always replaced by a new one.

**Cleaning of parts**

**NOTICE** All metall and synthetic parts are generally washed with suitable cleaning agents. Before using new and unknown cleaning agents check the compatibility of materials.

**Removed parts**

Before re-using disassembled parts, clean, check and refit them as per instructions.

Use clean screws and nuts only and inspect face of nuts and thread for damage. Check the contact faces and threads for damages. In case of doubt, use new screws and nuts.

**Nuts**

Once loosened, **always** replace self-securing nuts.

**Sealing rings, O-rings**

At reassembly of the engine, replace all sealing rings, gaskets, securing elements, O-rings and oil seals.

**Re-assembly**

Before re-assembly check components whether parts are missing. Only use adhesives, lubricants, cleaning agents and solvents indicated in the maintenance instructions. If not respected, damage may be the consequence.

## 1.4) Trouble shooting

**General notes**

In the Operators Manual, possible problems are listed. At the same time, a brief description of the necessary remedial action is given.

See chapter 12 in the Operators Manual for engine type 912 (Series).

d02874.fm

## 1.5) Consumable Materials

**General note**

**NOTICE** Use only the specified or **technically equivalent** materials from BRP-Powertrain for all maintenance work. When handling chemicals, comply with all the customary regulations and specifications of the producer, including the expiry date and instruction.

NOTES: To some extent product descriptions deviate in spite of equivalent technical properties, i.e.: LOCTITE 221 and LOCTITE 222. If necessary contact the manufacturer concerning the comparability. In some cases information can be obtained from the local authorized distributors and service partners for ROTAX engines.

NOTES: Respect the manufacturers instruction concerning the curing time and the expire date of the particular surface sealing compound.

The materials specified have been tested for a long time and are suitable for all operating conditions indicated by the manufacturer.

| No. | part no. | Description, Application | Qty. |
|---|---|---|---|
| 1 | 899785 | **LOCTITE 221 violet,**<br>medium-duty screw securing agent | 10 ml (0.003 gal (US)) |
| 2 | 897651 | **LOCTITE 243 blue,**<br>medium-duty screw securing agent | 10 ml (0.003 gal (US)) |
| 3 | 899788 | **LOCTITE 648,**<br>high strength screw securing agent | 5 ml (0.001 gal (US)) |
| 4 | 899789 | **LOCTITE 603 green,**<br>oil-tolerant grouting product, high-strength | 10 ml (0.003 gal (US)) |
| 5 | 898241 | **LOCTITE 480 black,**<br>instant adhesive increased flexibility | 20 ml (0.005 gal (US)) |
| 6 | 899784 | **LOCTITE 574 orange,**<br>surface sealing compound | 50 ml (0.013 gal (US)) |
| 7 | n.a. | **LOCTITE 518 red,**<br>surface sealing compound, can be used instead LOCTITE 574 | |
| 8 | 899791 | **LOCTITE 5910 black,**<br>surface sealing compound, can be used instead LOCTITE 574 and LOCTITE 518 | 50 ml (0.013 gal (US)) |
| 9 | 297434 | **LOCTITE Anti-Seize 8151,**<br>for the prevention of fretting corrosion | 50 g (0.11 lb) |
| 10 | 297433 | **MOLYKOTE G-N,**<br>Lubricating paste | 100 g (0.22 lb) |
| 11 | 897166 | **MOLYKOTE 44 medium,**<br>long-term lubricant for shaft seals | 100 g (0.22 lb) |
| 12 | 897330 | **Lithium-base grease or Dow Corning,**<br>to prevent leakage current | 250 g (0.55 lb) |

| No. | part no. | Description, Application | Qty. |
|---|---|---|---|
| 13 | 897870 | **Filter oil**<br>for optimum filter efficiency and protection against moisture | 14,8 ml (0.004 gal (US)) |
| 14 | 297368 | **SILASTIC 732,**<br>multi-purpose one-component silicon-based sealing compound | 310 ml (0.082 gal (US)) |
| 15 | 897186 | **SILICONE HEAT CONDUCTION COMPOUND**<br>Application of the heat conduction compound will reduce heat transfer resistance. The grease-like, temperature-resistant silicon compound fills cavities between components and the cooling element (e.g.: spark plug-cylinder head), which otherwise do not contribute to heat conduction. | 150 g (0.33 lb) |
| 16 | 297710 | **PU-glue**<br>for shock absorption | 310 ml (0.082 gal (US)) |
| 17 | n.a. | **Multi-purpose grease LZ**<br>Generally useable, neutrally colored multi-purpose grease, water resistant and highly adherent. Useable for temperatures from -35 °C to +120 °C (-31 °F to +248 °F) and can be subjected to mechanical loads. | |
| 18 | n.a. | **Preservation oil**<br>Requirements: The preservation oil has excellent penetrating capabilities and reaches even tiny gaps, it's highly effective additives protect against corrosion of metal surfaces. | |
| 19 | n.a. | **Very fine emery cloth SR 4600 A - very fine standard**<br>Is sold by the meter and used for Manual removal of smaller rust spots or oxidation, especially for optimum ground connections. It is highly suitable for removing LOCTITE from surfaces or threads to make them metallic clean. Before re-applying LOCTITE, clean surfaces with nitrothinner or degreasing agent (CASTROL ZA 30 or OMV-SOFT SOL). When using solvents, observe the safety regulations for persons and environment. | |
| 20 | 898570 | **Screw securing paint**<br>seals screws | 20 ml (0.005 gal (US)) |

d02874.fm

| No. | part no. | Description, Application | Qty. |
|---|---|---|---|
| 21 | n.a. | **Cleaning agents**<br>**NOTICE** Use only approved cleaning agents (e.g. kerosine, varsol, etc.) for cleaning all metal parts.<br>Do not use lye-based cold cleaner or degreasing agents. Do not clean coolant or oil hoses with aggressive solutions. Clean off sealing compound residue with sealant remover.<br>Soak combustion chamber, piston and cylinder head with cleaning agent and remove combustion residues with a bronze brush. Very good results have been achieved with “Clenvex 2000“. It is a solvent-cold cleaner, free of halogen, on the basis of selected fuel fractions with tensides and is biologically disposable.<br>Never use caustic or corrosive cleaning agents. | |
| 22 | n.a. | **MICRONORM abrasive**<br>This abrasive is suitable for local and gradual very fine treatment of steel parts with rust film (propeller shaft). The MICRONORM abrasive contains no noxious matter, is approved by the relevant authorities and guarantees optimum cleaning. The granulates used are of sizes 40 to 60 µ. It is possible to achieve a surface roughness of 0,5 to 1µ, which represents fine processing of surfaces. | |
| 23 | n.e. | **LOCTITE 7063**<br>Degreasing fluid. For parts cleaning before applcation of adhesives and sealants. | |

## 1.6) Acceptable methods, techniques and practice

**General note**

All general inspection, maintenance and repair has to be carried out in accordance with Advisory Circular AC 43.13 from FAA.

**Advisory Circular**

This Manual "Advisory Circular" AC describes maintenance methods, techniques and practice. These are recognized and authorized for inspection and repairs in non-pressurized areas for which there are no separate maintenance and repair instructions.

**Self-locking**

***NOTICE*** Self-locking nuts, cotter pins, tab washers and safety wires must be replaced each time they have been removed.

Respect without fail all additional indications regarding securing and sealing means and lubrication of fixation elements. Adhere to specified tightening torques.

**Nut securing**

When using a self-locking nut, take care that the polyamide insert ring on nuts according to DIN 985 as well as the securing element on nuts according to DIN 980 is positioned towards outside.

**Lock washer**

NOTES: When fitting lock washers, the curved-up ends (1) must point towards the screw head or nut.

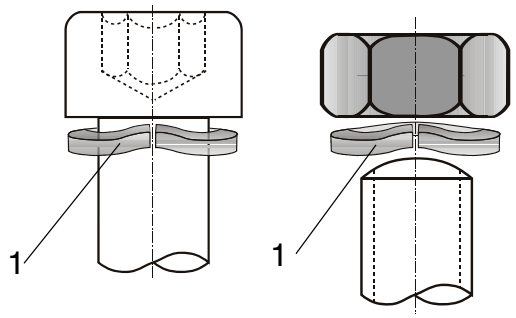


*00144*

*d02874.fm*

# Chapter: 05-10-00

## TIME LIMITS

**Introduction**

These checks, related to limited periods of operation, are planned to help avoid engine troubles by the use of preventive maintenance.

**Table of contents**

This chapter of the Maintenance Manual contains general information regarding TBO and time limits on rubber components.

NOTES

# 1) Definition of terms

## 1.1) Operating hours

**Definition**

All of the maintenance intervals, such as the 100 hr. inspection and the engine TBO, relate to the number of operating hours of the engine.

The operating hours are defined as follows in order to prevent misunderstandings and to ensure safety:

- All time during which the engine is running is counted towards the total number of operating hours.
- The time is counted irrespective of the load factor of the engine, such as idling or take-off power.

NOTES: A mechanical hour meter is directly coupled to the engine speed, the readings may deviate considerably from those given by electronic remitters (e.g. TCU, FlyDat). Maintenance and overhaul intervals are always dictated by the readings of the electronic hour meter.

- The planned inspections to be performed at certain intervals are based on experience from long test runs and field observations. They are intended as precautionary maintenance measures in order to ensure continued trouble-free operation of the engine.

## 1.2) Time limit

**Definition**

Time limits are predetermined time spans and intervals which are based either on calendar intervals or the number of engine operating hours. Once the time limits have been reached, the affected parts must either be replaced for a general overhaul, or maintenance work must be performed. These precautionary maintenance measures are designed to avoid engine malfunctions or defects and ensure continued airworthiness of the engine.

## 1.3) Life cycle

**Definition**

The life cycle is always specified as an exact time span and is also quoted in flight hours.

NOTES: Parts with a limited life cycle must be taken out of operation and overhauled if the specified time span or number of flight hours is reached (whichever comes first).

## 1.4) General overhaul (TBO)

**Definition**

The time between overhauls (TBO) for all objects (such as the engine, component assemblies, add-on components) is the approved length of operation under normal operating conditions before it becomes mandatory to send in these objects for an overhaul.

Normal operating conditions are the conditions which comply with the manufacturer's and the aviation authority's recommendations for the certification of airworthiness.

**Maintenance of operation**

The TBO values approved by the relevant authorities are based on performance tests and empirical values which have been gathered through operation of the engine and are required for the acceptance and certification of airworthiness. TBO values can be changed in response to possible upgrade/expansion programs.

**Legal obligation to keep**

TBO values for the engine are always shown in operating hours and years. The user must record the operating hours in the engine log book.

## 2) Time limit

**General**

**NOTICE** A general overhaul is due after a defined period of operation or after a specified calendar life since initial start of operation (whichever comes first).

The time limit for engine operation will be specified by the TBO.

**After reaching this time limit**

**NOTICE** After reaching this time limit, the engine has to be shipped to an authorized ROTAX overhaul facility.

For an overhaul, the engine must be removed from the aircraft, be cleaned, preserved and all openings to be closed to prevent entering of contaminants.

| Engine Type description | engine affected engine S/N | TBO Time Between Overhaul |
|---|---|---|
| **912 A** | up to and incl. 4,076.191 | 600 hr. or 10 years, whichever comes first(1 |
| **912 A** | from 4,076.192 up to and incl. 4,410.065 | 1000 hr. or 10 years, whichever comes first (1 |
| **912 A** | from 4,410.066 up to and incl. 4,410.471 | 1200 hr. or 10 years, whichever comes first (1 |
| **912 A** | from 4,410.472 up to and incl. 4,410.856 | 1500 hr. or 12 years, whichever comes first (1 |
| **912 A** | from 4,410.857 | 2000 hr. or 15 years, whichever comes first (1 |
| | | |
| **912 F** | up to and incl. 4,412.585 | 1000 hr. or 10 years, whichever comes first (1 |
| **912 F** | from 4,412.586 up to and incl. 4,412.816 | 1200 hr. or 10 years, whichever comes first (1 |
| **912 F** | from 4,412.817 up to and incl. 4,412.974 | 1500 hr. or 12 years, whichever comes first (1 |
| **912 F** | from 4,412.975 | 2000 hr. or 15 years, whichever comes first (1 |
| | | |
| **912 S** | up to and incl. 4,922.776 | 1200 hr. or 10 years, whichever comes first (1 |
| **912 S** | from 4,922.777 up to and incl. 4,923.889 | 1500 hr. or 12 years, whichever comes first |
| **912 S** | from 4,923.890 | 2000 hr. or 15 years, whichever comes first (1 |
| | | |
| **912 UL** | up to and incl. 4,152.666 | 600 hr. or 10 years, whichever comes first (1 |
| **912 UL** | from 4,152.667 up to and incl. 4,404.717 | 1200 hr. or 15 years, whichever comes first (1 |
| **912 UL** | from 4,404.718 up to and incl. 4,409.715 | 1500 hr. or 15 years, whichever comes first (1 |
| **912 UL** | from 4,409.716 | 2000 hr. or 15 years, whichever comes first (1 |
| | | |
| **912 ULS** | up to and incl. 4,427.532 | 1200 hr. or 10 years, whichever comes first (1 |
| **912 ULS** | from 4,427.533 up to and incl. 6,775.789 | 1500 hr. or 12 years, whichever comes first |

*d02875.fm*

| Engine Type description | engine affected engine S/N | TBO Time Between Overhaul |
|---|---|---|
| **912 ULS** | from 6,775.790 | 2000 hr. or 15 years, whichever comes first (1 |
| | | |
| **912 ULSFR** | up to and incl. 4,429.714 | 1200 hr. or 10 years, whichever comes first (1 |
| **912 ULSFR** | from 4,429.715 up to and incl. 6,775.789 | 1500 hr. or 12 years, whichever comes first |
| **912 ULSFR** | from 6,775.790 | 2000 hr. or 15 years, whichever comes first (1 |

For the TBO of the specific engine type/version refer to the table below.

(1 Extension of the TBO is possible and will be specified by a Service Bulletin (SB) for the respective engine type. For extensions already effective refer to the engine log book or release certificate.

**Authorized exceeding**

Extension or exceeding of the TBO by 5 % or 6 months is allowed whichever comes first.

**Shipment**

The shipment to an authorized ROTAX overhaul facility must include the following:

| | |
|---|---|
| 1 | Engine log book. |
| 2 | Maintenance records of the engine (i.e. all maintenance check lists, and reports of operation, of maintenance, of findings and of oil analyses). |
| 3 | The engine assembly as per supply volume. Additionally all added-on parts as in the supply volume such as carburetors, filters, fuel pump, external generator, sensors, ignition unit, electric starter, oil tank. |
| 4 | Indication of total engine operating hours (TSN) and where applicable, engine operating hours since a previous overhoul (TSO).<br>NOTE: This information must be supplied to allow the service history of components to be traced. |
| 5 | Data about the type of aircraft used. |
| 6 | Useful remarks and observations concerning the engine. |

## 2.1) Time limit for rubber parts

**General note**

**NOTICE** This time limit must be followed **independently** and **in addition** to the visual inspections (see chap. 05-20-00 section: 5.1)) of the respective components.

**Time limit**

The following components and systems must be replaced every 5 years:

| | |
|---|---|
| - venting hose of the carburetors | |
| - all rubber hoses of the cooling system | |
| - all rubber hoses of the fuel system (incl. teflon hoses) | Fuel pump and insulating flange, if this is fixed with fuel hoses. |
| - all rubber hoses of the lubrication system which are part of the engine supply volume and if they are not in the maintenance schedule of aircraft manufacturer | |
| - carburetor sockets | |
| - connecting hose of the air intake system | |
| - diaphragm on both carburetors | |
| - rubber hoses on compensating tube | |
| - V-belt | |

## 2.2) Time limit for the coolant

**General note**

Coolant must be replaced as per manufacturers instructions, at the latest during overhaul or when the engine is replaced.

## 2.3) Annual inspection

**General note**

A 100 hr. inspection is to be carried out periodically after every 100 hours of operation **or every 12 months**, whichever comes first.
See chap. 05-10-00 section: 2).

d02875.fm

# Chapter: 05-20-00

## SCHEDULED MAINTENANCE CHECKS

**Introduction**

The owner and/or user is primarily responsible for the maintenance and airworthiness of the engine. This includes compliance with all applicable airworthiness directives.

This inspection protocol is not intended to be all-inclusive, for no such protocol can replace the knowledge and experience of a certified aircraft mechanic. As the party primarily responsible for the maintenance and airworthiness of the engine, the owner or user should only have the maintenance work carried out by qualified engineers.

**Documentation required**

It is the responsibility of the owner and/or user to make sure that the aircraft mechanic performing the work on the engine has access to the previous Inspection Protocols and any other required documents.

**Table of contents**

This chapter of the Maintenance Manual contains general information regarding periodic maintenance and the maintenance check list.



d02876.fm

NOTES

## 1) Scheduled maintenance checks

**Definition**

This section lists the periodic inspections which must be carried out after a specified periods of operation.

**Intervals**

Periodic inspections are those which must be performed at 50, 100, 200, 600 hr. intervals in accordance with chap. 05-20-00. section: 5.1).

This means for example that **every 100** hr. of operation a 100 hr. check and all 200 hr. additional checks as per maintenance check list must be carried out.

| | Intervals - hours | | | | | | | | | |
|---|---|---|---|---|---|---|---|---|---|---|
| | **25 hr** | **100 hr** | **200 hr** | **300 hr** | **400 hr** | **500 hr** | **600 hr** | **700 hr** | **to** | **2000 hr** |
| **100 hr** | X | X | X | X | X | X | X | X | | X |
| **200 hr** | | | X | | X | | X | | | |
| **600 hr** | | | | | | | X | | | |

**100 hr. check**

- In order to demonstrate continued airworthiness, an engine must be inspected after every 100 hours of operation.
- For the intervals between maintenance work, a tolerance of ±10 hr. is permissible, but these tolerances must not be exceeded. This means that if a 100 hr. check is actually carried out at 110 hr., the next check will be due at 200 hr. ±10 hr. and not at 210 hr. ±10 hr.
- If maintenance is performed before the prescribed interval, the next maintenance check is to be done at the same interval (e.g. if first 100 hr. check is done after 87 hours of operation, the next 100 hr. check must be carried out after 187 hours of operation).

**Special hr. check**

NOTES: This maintenance schedule contains a column for a 50 hr. check. This check is recommended by the manufacturer but not essential, with the exception of oil change when operating with leaded AVGAS.

**25-hr. check**

- In order to demonstrate continued airworthiness, an engine must be inspected after the first 25 hours of operation.
- The checks performed at the 25 hr. inspection are the same as for the 100 hr. inspection. This applies both to newly delivered engines and to overhauled engines.

NOTES

## 2) Unscheduled maintenance checks

**Operating limits exceeded**

An inspection of the engine must be performed if the operating limits of the engine have been exceeded (e.g. overspeed, excessive temperature etc.), or if unusual operating conditions have occurred during operation (e.g. lightning strike). In such cases the engine must be inspected in accordance with the applicable unscheduled maintenance checks. (See chapter 05-50-00).

**Recommends inspections**

The manufacturer also recommends the following inspections whenever maintenance is carried out (where not already prescribed by the airframe manufacturer, as possible malfunctions could have negative effects on engine operation.

| part | inspection | possible danger |
|---|---|---|
| **Engine cowling** | - for discoloring and warping. | Danger of overheating |
| **Exhaust fixation** | - re-tighten the exhaust fixation on the cylinder head after the first 2 hr. of operation. | Leakage |
| **Exhaust** | - of the exhaust unit (where necessary, replaced application of LOCTITE Anti-Seize). | Risk of fracture, wear. Smooth engine running. |
| **Fuel filter** | - of fuel filter on airframe side (for foreign bodies, sealing material and loose fragmented material). | Engine to misfire. Power loss. Engine running too lean (Engine malfunction and damage). |
| **Electr. fuel pump** | - correct function. | Insufficient fuel supply. Engine running to lean (Engine malfunction and damage). |
| **Battery** | - acid concentration for each cell<br>Observe the manufacturers instruction. | Starting problems |
| **Oil** | - for oil contamination.<br>- analyse the oil (provides additional information on the condition of the engine). | Possible engine wear |
| **Radiators, Lines** | - for damage.<br>- check for discoloration - and cracks. | Danger of overheating |
| **Propeller** | - undamaged and runs true<br>- carry out dynamically balancing including verification of propeller track. | Engine damage, unusual vibrations |

d02876.fm

NOTES

## 3) Visual inspection

| | |
|---|---|
| **General note** | The scope of a visual inspection generally includes, but is not necessarily limited to, the following. |
| **Moving parts** | Normal operating condition, accurate alignment, leak-tightness, cleanliness, ease of movement, adjustment, mechanical stress, travel, catching, extreme wear, cracks, corrosion, deformation and other visually evident damage. |
| **Parts** | Secure seating, surface condition, cleanliness, deformation, cracks in welding seams or due to material fatigue or stress, corrosion and other visually evident damage. |
| **Fuel-, Air- and Oil lines** | Cracks, dents, kinks, required flexibility, collapsed lines/hoses, abrasion, cleanliness, secure seating and other visually evident damage. |
| **Wiring** | General cleanliness; loose, corroded or broken terminals; chafed, broken or worn insulation; secure seating, heat damage and other visually evident damage. |
| **Screws and Nuts** | Surface damage, secure seating, locking wire, securing paint and other visually evident damage. |
| **Filter** | Filters and screens must be inspected for contamination and potential blockages, cleaned and replaced as required. |

NOTES

## 4) Maintenance schedule procedures (maintenance check list)

| | |
|---|---|
| **Inspections** | All stated checks are visual inspections for damage and wear, unless otherwise stated. |
| **Specified period** | All listed work must be carried out within the specified period. |
| **Maintenance check lists** | Checks are carried out as per the maintenance check lists, where type and volume of maintenance work is outlined in key words.<br>- The lists must be photocopied and filled out for each maintenance check. |
| **Extra inspections** | - The respective check (e.g. 100 hr. check) must be noted on the top of each page of the maintenance check list.<br>- All the maintenance work carried out must be initialled in the "signature" area by the aircraft mechanic performing the task. |
| **Maintenance records** | After maintenance, the completed check lists must be entered in the maintenance records. The maintenance must be confirmed in the log book. |
| **Discrepancies/remedial action** | All discrepancies and remedial action must be recorded in a report of findings to be generated and maintained by the company authorized to carry out maintenance work. It is the responsibility of the aircraft operator to store and keep the records. |
| **Replacement of equipment** | Replacement of equipment (e.g. fuel pump, governor....) and execution of SB (LTA) must be entered in the engine log book, stating S/N, TSN and date. |

NOTES

## 5) Check List/Maintenance Schedule

| Identification | |
|---|---|
| **AIRCRAFT** | |
| Registration number | |
| Aircraft make | |
| Aircraft model and S/N | |
| Time since new | |
| Propeller brand | |
| Propeller model and S/N | |
| **ENGINE** | |
| Engine type | |
| Engine S/N | |
| TSN (**t**ime **s**ince **n**ew) | |
| TSO (**t**ime **s**ince **o**verhaul) | |
| Used operating fluids: | |
| coolant | |
| - mixture ratio | |
| fuel | |
| oil | |
| **AIRCRAFT OPERATOR** | |
| Name | |
| Contact | |
| Address | |
| | |
| | |
| Telephone/Fax/E-mail | |
| | |
| | |
| | |
| | |
| | |

d02876.fm

| **Identification** | | | | | |
|---|---|---|---|---|---|
| **MAINTENANCE FACILITY** | | | | | |
| Maintenance workshop | | | | | |
| Address | | | | | |
| | | | | | |
| | | | | | |
| Telephone/Fax/E-mail | | | | | |
| | | | | | |
| Certificate | | | | | |
| | | | | | |
| This check is applicable (circle on) | 25 hr. | 50 hr. | 100 hr. | 200 hr. | 600 hr. |
| | | | | | |
| **Next check due at:** | _____hr. (TS_____) (engine hr.) | | | | |
| | | | | | |
| | | | | | |

d02876.fm

## 5.1) Maintenance Schedule

**General note** Perform the following maintenance tasks at the intervals shown in the maintenance check list. See chapter 05-20-00 25 hr. check.

Legend: X = do the task

blank = no task required

NOTES: If the points 1-3 in order to continue with the maintenance schedule.
If one of the points 1-3 not OK, the engine must be checked and repaired in accordance with the BRP-Powertrain instructions for continued airworthiness.

| Points of Inspection | Interval Operating hours | | Chapter Reference | Signature |
|---|---|---|---|---|
| | as indicated | 100 hr. | | |
| **1.) Visual inspection of the engine** | | | | |
| General visual inspection of the engine for damage or abnormalities.<br>Check cooling air duct and cooling fins of the cylinders for obstruction, cracks, wear and good condition.<br>Take note of changes caused by temperature influence. | recommended 50 hr. | X | 12-20-00 sec. 3) | |
| Visual inspection of the temperature sensor and the oil pressure sensor. Inspect for tight fit and good condition. | | X | | |
| Inspect all coolant hoses for damage, including leakage, hardening from heat, porosity, loose connections and secure attachment. Verify routing is free of kinks and restrictions. | | X | 12-20-00 sec. 9.1) | |
| Carry out visual inspection of leakage bore at the base of the water pump for signs of leakage. | | X | 12-20-00 sec. 4) | |
| Inspect the expansion tank for damage and abnormalities. Check coolant level, replenish as necessary.<br>Inspect radiator cap.<br>Inspect protection rubber on expansion tank base for correct fit. | | X | 12-20-00 sec. 9.1) | |
| Inspect the overflow bottle for damage and abnormalities.<br>Verify coolant level, replenish as necessary.<br>Inspect line from expansion tank to overflow bottle for damage, leakage and clear passage.<br>Inspect venting bore in cap of overflow bottle for clear passage. | | X | 12-20-00 sec. 9.5) | |

d02876.fm

| Points of Inspection | Interval Operating hours | | Chapter Reference | Signature |
|---|---|---|---|---|
| | as indicated | 100 hr. | | |
| Inspect all oil lines for damage, leakage, hardening from heat, porosity, security of connections and attachments. Verify routing is free of kinks and restrictions. | | X | 12-20-00 sec. 4) | |
| Inspect all fuel lines for damage, leakage, hardening from heat, porosity, security connections and attachments. Verify routing is free of kinks and restrictions. In the case of steel fuel lines (912 F, 912 S and/or optional), also check for any cracks and/or scuffing marks. | | X | 12-20-00 sec. 4) | |
| Inspect the wiring and its connections for secure fit, damage and signs of wear. | | X | 12-20-00 sec. 14.1) | |
| **2.) Magnetic plug** | | | | |
| Check the magnetic plug. | | X | 12-20-00 sec. 12) | |
| **3.) Compression check** | | | | |
| Check the compression by the differential pressure method.<br>Test pressure_____hPa (psi)<br><br>**Pressure drop (% or fraction)**<br>**Cyl #** 1 2 3 4<br>**bar/psi** | every 200 hr. | | 12-20-00 sec. 5) | |
| **4.) Checking the engine suspension** | | | | |
| Inspect engine suspension and fasteners for secure fit, including damage from heat, deformation, cracks. | | X | 12-20-00 sec. 3.1) | |
| **5.) Engine external parts** | | | | |
| Inspect screws and nuts of all external parts for tight fit. Inspect safety wiring, replace as necessary. | | X | | |
| **6.) Engine cleaning** | | | | |
| Engine cleaning | | X | 12-20-00 sec. 1) | |
| **7.) Checking the air filter** | | | | |
| Checking the air filter. | | X | 12-20-00 sec. 2) | |

d02876.fm

| Points of Inspection | Interval Operating hours | | Chapter Reference | Signature |
|---|---|---|---|---|
| | as indicated | 100 hr. | | |
| **8.) Checking the carburetors** | | | | |
| Checking the idle speed. | | X | 12-20-00 sec.10.3.1) | |
| Checking the ventilation of the float chambers. Any trouble with the float chamber ventilation impairs engine and carburetor function and must therefore be avoided.<br>Check that the passage of the ventilation lines is free and that no kinks can arise. | 200 hr. | | | |
| Check for free movement of the carburetor actuation (throttle lever and starting carburetor).<br>Check that the bowden cable allows the full travel of the throttle lever from stop to stop. | | X | 12-20-00 sec. 10.5) | |
| Removal/assembly of the two carburetors for carburetor inspection. | every 200 hr. | | Heavy MM 73-00-00 sec. 3.1) | |
| Check carburetor synchronization. Mechanical or pneumatic synchronization. | | X | 12-20-00 sec. 10.2) | |
| Inspect the float chamber assy. for contamination and corrosion. | annual inspection | | 12-20-00 sec. 10.5) | |
| **9.) Inspecting carburetor sockets and drip tray** | | | | |
| Inspect the carburetor sockets for damage and abnormalities, checking for cracks, wear and good condition.<br>Take note of changes caused by temperature influence.<br><br>(1 See SB-912-030 - latest edition. | every 200 hr. (1 | | Heavy MM 73-00-00 sec. 3.4.3) | |
| **10.) Spark plug connectors** | | | | |
| Check that resistance spark plug connectors fit tightly on the spark plugs.<br>Minimum pull-off force is 30 N (7 lb). | every 200 hr. | | | |
| **11.) Spark plugs** | | | | |
| Remove all spark plugs, check the heat range designation, clean, check electrode gap and adjust if necessary. Check electrode gab and adjust as necessary. Replace as required. | | X | 12-20-00 sec. 14.2) | |
| Replacing spark plugs. | every 200 hr. | X(1 | 12-20-00 sec. 14.2) | |
| (1 use of leaded fuel more than 30% of operation. | | | | |
| | | | | |

d02876.fm

| Points of Inspection | Interval Operating hours | | Chapter Reference | Signature |
|---|---|---|---|---|
| | as indicated | 100 hr. | | |
| **12.) Flushing the cooling system** | | | | |
| Flushing the cooling system where conventional coolants are used. | when replacing the coolant | | 12-20-00 sec. 9.3) | |
| **13.) Checking the propeller gear box** | | | | |
| Check the friction torque in free rotation on gearboxes with overload clutch.<br>Actual friction torque_____ Nm (in.lbs) | | X | 12-20-00 sec. 15) | |
| Gearboxes of series 3 (with overload clutch) and use of leaded fuel more than 30% of operation.<br>Inspect overload clutch. | every 600 hr. | | 05-50-00 sec. 2)<br>SB-912-033 | |
| Checking the propeller gearbox (with overload clutch).<br>(1 only applicable for engine type 912 S/ULS/ULSFR | every 1000 hr.(1 | | 12-20-00 sec. 15.2) | |
| Checking the propeller gearbox (without overload clutch).<br>(2 only applicable for engine type 912 UL/ULS/ULSFR | every 600 hr.(2 | | 12-20-00 sec. 15.2) | |
| | | | | |
| **14.) Oil change** | | | | |
| Remove old oil filter from engine and install new oil filter. | 50 hr.(1 | X | 12-20-00 sec. 11.3), 11.4)) | |
| Cut old oil filter without producing any metal chips and inspect filter mat.<br>Findings:_____<br>_____ | 50 hr.(1 | X | 12-20-00 sec. 11.5) | |
| Check oil tank.<br>Refill oil tank with approx. 3 litres of oil. For oil quality, see Operators Manual and SI-912-016, latest edition. | 50 hr.(1 | X | 12-20-00 sec. 11.2), 11.6) | |
| (1 In the case more than 30% of operation with leaded fuel e.g.: AVGAS 100 LL | | | 12-20-00 sec. 11.2)<br>SI-912-016 | |
| | | | | |
| **15.) Oil level check** | | | | |
| Verify oil level, replenish as necessary. | | X | 12-10-00 sec. 4.1) | |
| **16.) Checking the V-belt tension** | | | | |
| On configurations with auxiliary generator, check the attachment and the V-belt tension. | | X | 12-20-00 sec. 6) | |
| | | | | |

d02876.fm

| Points of Inspection | Interval Operating hours | | Chapter Reference | Signature |
|---|---|---|---|---|
| | as indicated | 100 hr. | | |
| **17.) Engine test run** | | | | |
| Observe the safety instructions! | | | | |
| Start the engine and run to operating temperature.<br>Limits see Operators Manual 912 series.<br>Ignition check at _____ rpm engine speed.<br>Speed drop without ignition circuit:<br>A (Off)_____rpm<br>B (Off)_____rpm<br>A/B (difference)_____rpm<br>Inspect carb heat system.<br>Hit the preheating and make a note of speed drop.<br>Speed drop_____rpm.<br>Preheating “OFF“, engine idle running and make a note of idle speed running _____rpm.<br>After engine test run, re-tighten the oil filter by hand (only at cold engine).<br>Checks for leaks. | | X | 12-20-00 sec. 8) | |
| **General note** | | | | |
| All Service Instructions and Service Bulletins are complied with. | | X | | |
| | | | | |
| | | | | |
| | | | | |
| | | | | |
| | | | | |

**Returning engine to service**

On the engine identified as per point 5, on the _____ the_____hr.

Check at_____hr. (TSN___, TSO___) was carried out according to recommendations of the engine manufacturer and was recorded in the Engine Log book.

Location, Date_____

Inspector_____

Aircraft mechanic_____

Certificate No._____

d02876.fm

NOTES

# Chapter: 05-50-00

## UNSCHEDULED MAINTENANCE CHECKS

**Introduction**

**NOTICE** In the course of special checks specify if **additional checks** for components (e.g. hydraulic governor) is applicable.
After each special check/repair work, an engine test run and a leakage check must be carried out.

**NOTICE** Observe without fail all the specified instructions.

Special checks must be carried out immediately in the event of an engine fault (e.g. abnormal operation as defined in the Operators Manual) which impairs the airworthiness of the engine.

**Table of contents**

This chapter of the Maintenance Manual contains general information regarding unscheduled maintenance checks and their associated procedures.

NOTES

## 1) Engine check after propeller strike incidents

**Definition**

A propeller strike is:

- Any incident while the engine is stationary or running which makes it necessary to perform repairs on the propeller.

See SL-912-015, SL-914-012, SL-2ST-009, current edition.

### 1.1) Propeller gearbox with integrated overload clutch

**General note**

After any propeller strike the following inspections must be performed before operation can continue.

| Step | Procedure |
|---|---|
| 1 | Inspect the engine for damage. If any damage is detected, inspect, repair or overhaul the whole engine in accordance with the BRP-Powertrain instructions for continued airworthiness.<br>Inspect all systems for correct functioning. |
| 2 | Inspect add-on components. |
| 3 | Observe the directives of the aircraft manufacturer. |
| 4 | Remove the gearbox and roller bearing of the propeller shaft. |
| 5 | The whole gearbox must be inspected, repaired or overhauled in accordance with the BRP-Powertrain instructions for continued airworthiness - but not limited too<br>- Carry out detailed inspection of all gearbox components.<br>- NDT for cracks on gearbox housing, propeller shaft and gear set.<br>- Inspect drive for governor and vacuum pump (if fitted). |
| 6 | Observe the manufactures instructions for the governor, vacuum pump and propeller. |
| 7 | Inspect the crankshaft on the power take off side for out-of-roundness. See chapter 72-00-00 section. 3.18) of the Heavy Maintenance Manual. |

## 1.2) Propeller gearbox without integrated overload clutch

**Propeller strike**

The following inspections must be performed before operation can continue.

| Step | Procedure |
|---|---|
| 1 | Inspect the engine for damage. If any damage is detected, inspect, repair or overhaul the whole engine in accordance with the BRP-Powertrain instructions for continued airworthiness.<br>Inspect all systems for correct functioning. |
| 2 | Inspect add-on components. |
| 3 | Observe the directives of the aircraft manufacturer. |
| 4 | Remove the gearbox and roller bearing of the propeller shaft. |
| 5 | The whole gearbox must be inspected, repaired or overhauled in accordance with the BRP-Powertrain instructions for continued airworthiness - but not limited too<br>- Carry out detailed inspection of all gearbox components.<br>- NDT for cracks on gearbox housing, propeller shaft and gear set.<br>Inspect drive for governor and vacuum pump (if fitted). |
| 6 | Observe the manufactures instructions for the governor, vacuum pump and propeller. |
| 7 | Inspect the crankshaft on the power take off side for out-of-roundness. Propeller shock load - Inspection of crankshaft distortion on installed crankshaft. See chapter 72-00-00 section. 3.9) of the Heavy Maintenance Manual. |

## 2) Checking of the overload clutch

**General note**

In the event of lead deposits and/or if slipping is suspected, it will be necessary to check the overload clutch.

NOTES: Slipping of overload clutch is apparent if at engine speed rise, the propeller speed does not increase at the same rate.

NOTES: The engine should be run for a short time just prior to the test, otherwise there is the risk of the clutch „drying out“, resulting in a higher torque.

| Step | Procedure |
|---|---|
| 1 | Remove the propeller as per manufacturers instruction. |
| 2 | Lock the crankshaft. See chap. 12-20-00 section: 7) |
| 3 | **NOTICE** Danger of damage to the engine suspension! Depending on the engine installation (e.g. in the case of extremely lightweight engine suspension), the gearbox must be removed and the test carried out on a suitable mounting attachment.<br>A specially prepared lever (e.g. length 1.5 m (4.92 ft.), see Fig.1) is fitted on the propeller flange and the breakaway torque measured with a suitable measuring tool.<br>NOTE: Because of difficult measurement of the slipping torque the breakaway torque is measured. |

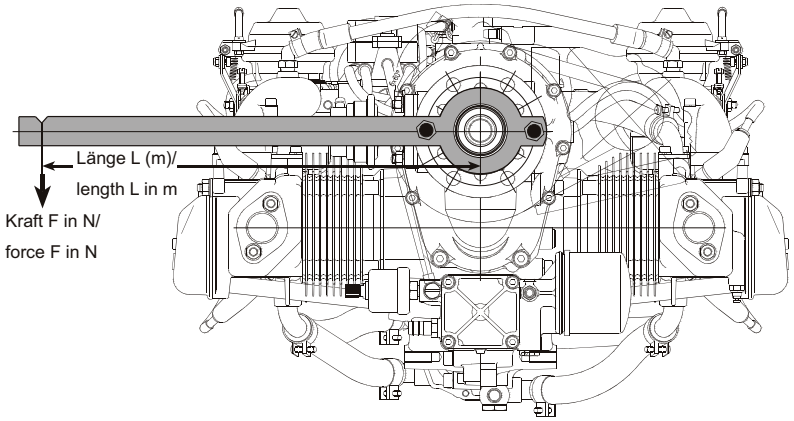


*Fig. 1* 08054

d02877.fm

**Measurement**

Repeat the measurement several times to get a stable value.

The breakaway torque is calculated on the basis of the force (F) measured in N and the length of the lever arm (L) used at the normal distance from it in m (N x m = Nm).

**Obtained value**

**NOTICE** Do not exceed 800 Nm (590 ft.lb) otherwise gearbox damage can occur.

The value determined must be between 600 and 800 Nm (442 and 590 ft.lb.).

If the value is greater or smaller than the limit value, the overload clutch must be inspected, repaired or overhauled in accordance with the BRP-Powertrain instructions for continued airworthiness.

| Step | Procedure |
|---|---|
| 4 | Release the crankshaft, see chap. 12-20-00 section: 7). |

d02877.fm

## 3) Examination after engine failure

**General note**

In order to find possible causes of the failure, it is important to pass on all available data. Observations on the aircraft and the engine suspension can also be of help. It is important to pay particular attention to any of the following engine phenomena to facilitate troubleshooting.

**Engine**

| Engine runs erratically and misfires | |
|---|---|
| **part** | **possible cause** |
| Fuel system | fuel supply<br>vapour locks<br>contamination<br>float chamber venting<br>false air intake due to defective carburetor flange<br>carburetor icing |
| Ignition system (shorting cable, electronic module, charging coil)<br>Spark plug | malfunction<br>grounding defect<br>wrong spark plug connection |

**Rough running**

| Rough running engine | |
|---|---|
| **part** | **possible cause** |
| Ignition | wiring (assignment fault) |
| Carburetor | fuel supply<br>contamination in float chamber or float needle valve<br>float chamber venting<br>false air intake due to defective carburetor flange<br>incorrect synchronization of the carburetor |
| Engine | engine temperature too low<br>too lean carburetor jetting due to conditions prevailing in intake silencer |

**Engine stoppage**

**NOTICE** Should one of the above mentioned points occur even for a short time then a detailed check of the engine is necessary. The fault needs to be located and corrected.

| Unintended engine stoppage by seizing | |
|---|---|
| **part** | **possible cause** |
| Oil system | oil pressure too low or no oil pressure<br>oil shortage<br>contamination<br>incorrect venting |
| Oil pump | defect |

d02877.fm

| Unintended engine stoppage by seizing | |
|---|---|
| **part** | **possible cause** |
| Camshaft bearings/Conrod bearings | rather consequential damage wear (low oil pressure) |
| **NOTICE** The entire assembly must be dismantled, inspected and repaired. | |

- The whole engine must be inspected, repaired or overhauled in accordance with the BRP-Powertrain instructions for continued airworthiness.
- Inspect all systems for correct functioning.
- Detailed inspection of affected engine components.

**Cylinder head**

A rise in cylinder head temperature above normal operating limits (see Operators Manual) is a clear signal for a failure in the cooling system.

| Cylinder head temperature too high | |
|---|---|
| **part** | **possible cause** |
| Cooling system | not enough coolant<br>bad venting |
| Return valve is not working | malfunction |
| Radiator | contaminated |
| Radiator cap | leaking |
| Pressure relief valve | malfunction |
| Water pump | malfunction |

d02877.fm

## 3.1) Returning engine to service after submerging in water

**General note**

**NOTICE** The engine must be marked clearly “Engine submerged in water“.

An engine which has been submerged in water must be inspected, repaired or overhauled in accordance with the BRP-Powertrain instructions for continued airworthiness.

- Inspect all systems for correct functioning.
- Carry out detailed inspection of affected engine components.

## 3.2) Inspection in extreme climatic conditions

**General note**

**NOTICE** Every 25 hr. checks of air filter, coolant radiator and oil cooler are necessary.

Flying in deserts or areas with heavily contaminated or dusty air causes increased wear on all components. For this reason, shorter maintenance intervals are recommended.

Flying in areas with extreme climatic conditions or in extreme altitudes requires adjustment of the carburetor jetting and of the cooling system. To do this, it is necessary to contact the aircraft manufacturer and an authorized ROTAX distributor.

## 3.3) Exceeding of max. admissible engine RPM

**General note**

NOTES: Any exceeding of the max. admissible engine RPM must be entered by the pilot into the engine log book stating duration extent of overspeeding and pertinent detail.

**up to 6200 rpm max. 1 min.**

**If the limit was exceeded for max. 1 minute up to 6200 rpm**

| Step | Procedure |
|---|---|
| 1 | Check that the push-rods are straight. |

**max. 6200 rpm more than 1 min.**

**If the limit was exceeded for more than 1 minute**

| Step | Procedure |
|---|---|
| 1 | The whole engine must be inspected, repaired or overhauled in accordance with the BRP-Powertrain instructions for continued airworthiness. |
| 2 | Check that the push-rods are straight. |
| 3 | Inspect the crankshaft for out-of-roundness. See chapter 72-00-00 section 3.9) of the Heavy Maintenance Manual). |
| 4 | Inspect all systems for correct functioning. |
| 5 | Detailed inspection of affected engine components. |

**more than 6200 rpm**

**If the speed of 6200 rpm was exceeded**

| Step | Procedure |
|---|---|
| 1 | The whole engine must be inspected, repaired or overhauled in accordance with the BRP-Powertrain instructions for continued airworthiness. |
| 2 | Check that the push-rods are straight. |
| 3 | Replace the crankshaft. |
| 4 | Inspect all systems for correct functioning. |
| 5 | Detailed inspection of affected engine components. |

## 3.4) Exceeding of max. cylinder head temperature

**General note**

**NOTICE** If the maximum cylinder head temperature is exceeded, other limits are also often exceeded, e.g. oil temperature. Please observe the relevant instructions.

NOTES: Any exceeding of the max. admissible cylinder head temperature must be entered by the pilot into the engine log book, stating duration extent of excess temperature and pertinent detail.

**Graphic**

Overview and proceed:

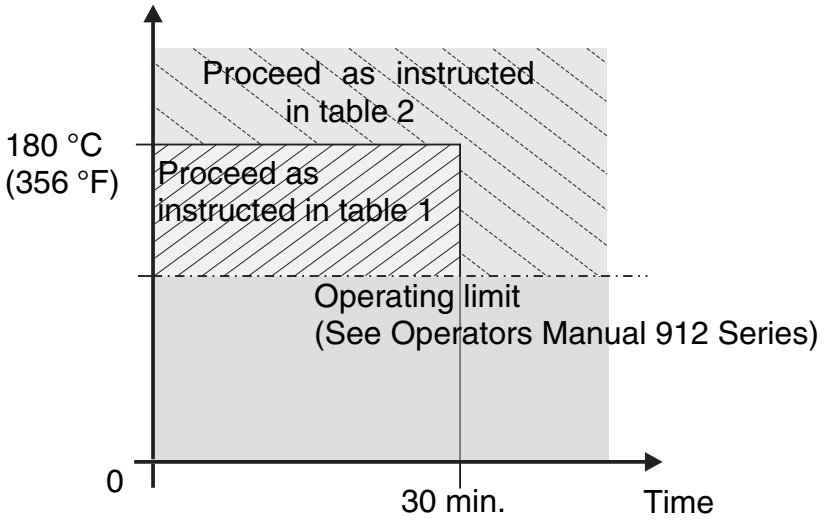


*Fig. 2* 07140

**Exceeded up to 180 °C (356 °F)**

Table 1.

| Max. temperature exceeded up to 180 °C (356 °F) - briefly | |
|---|---|
| **Step** | **Procedure** |
| 1 | The whole cooling system must be inspected, repaired or overhauled in accordance with the BRP-Powertrain instructions for continued airworthiness. |
| 2 | Inspect all further systems for correct functioning. |
| | Carry out detailed inspection of the affected engine components such as.<br>- Leakage check on the cooling system.<br>- Check that the cylinder head attachment is fitted securely. If the cylinder head nut is loose, proceed as instructed in sec. “Excess temperature of over 180 °C (356 °F) and/or for longer than 30 min.“<br>- Check all coolant fittings (feed/outflow) for secure fit. |

d02877.fm

**Exceeded of over 180 °C (356 °F)**

Table 2.

| Excess temperature of over 180 °C (356 °F) and/or for longer than 30 min. | |
|---|---|
| **Step** | **Procedure** |
| 1 | The whole cooling system must be inspected, repaired or overhauled in accordance with the BRP-Powertrain instructions for continued airworthiness. |
| 2 | Inspect all further systems for correct functioning. |
| 3 | Carry out detailed inspection of the affected engine components. |
| 4 | Check compression by carrying out a differential pressure check. |
| 5 | All cylinder heads and cylinders must be removed and subjected to a detailed check including hardness testing.<br>See chap. 72-00-00 in the Heavy Maintenance Manual. |

d02877.fm

## 3.5) Exceeding the max. permissible oil temperature

**General note**

**NOTICE** If the max. permissible oil temperature is exceeded, other limits are often exceeded, too, e.g. the cylinder head temperature. Please observe the relevant instructions.

NOTES: Any exceeding of the max. admissible oil temperature must be entered by the pilot into the engine log book, stating duration extant of excessive temperature and pertinent detail.

**Graphic**

Overview and proceed;

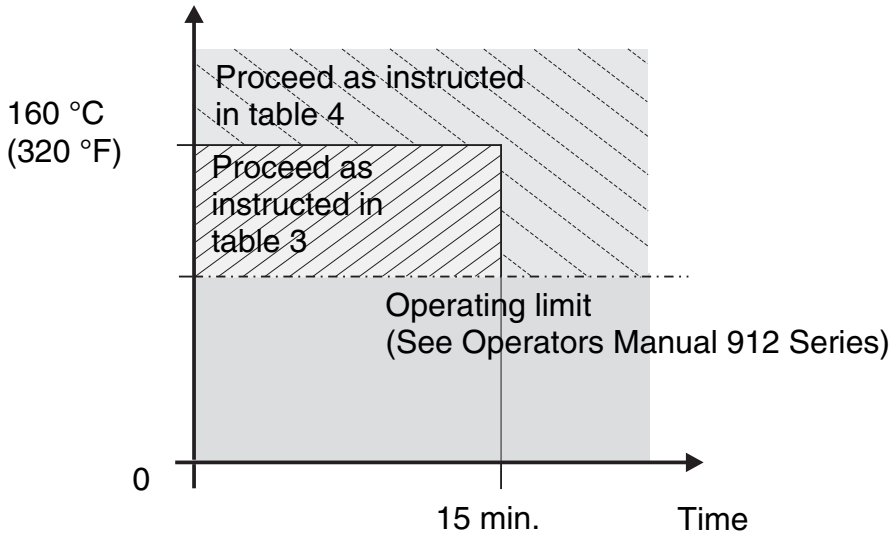


*Fig. 3* 07140

**Exceeding up to max. 160 °C (320 °F)**

Table 3.

| Excess temperature up to max. 160 °C (320 °F) max. 15 min. | |
|---|---|
| **Step** | **Procedure** |
| 1 | The whole oil system must be inspected, repaired or overhauled in accordance with the BRP-Powertrain instructions for continued airworthiness. |
| 2 | Inspect oil level in the oil tank. |
| 3 | Inspect oil cooler for contamination and check the entire oil circuit for correct functioning. |
| 4 | Check that oil lines are routed correctly and undamaged. |
| 5 | Cut oil filter housing and inspect filter mat for foreign matter. |
| 6 | Carry out oil change. |
| 7 | Inspect all further systems for correct functioning. |

**Exceeding over 160 °C (320 °F)**

Table 4.

| Excess temperature over 160 °C (320 °F) for longer than 15 min. | |
|---|---|
| **Step** | **Procedure** |
| 1 | The whole engine must be inspected, repaired or overhauled in accordance with the BRP-Powertrain instructions for continued airworthiness. |
| 2 | Inspect all further systems for correct functioning. |
| 3 | Carry out detailed inspection of the affected engine components. |
| 4 | The whole oil system (oil cooler, oil lines) must be inspected. |
| 5 | Cut oil filter housing and inspect filter mat for foreign matter. |

## 3.6) Oil pressure below minimum value

**General note**

**NOTICE** If the oil pressure falls below the minimum value, other limits are often exceeded, e.g. the oil temperature. Please observe the relevant instructions.

NOTES: Any exceeding of the min. admissible oil pressure must be entered by the pilot into the engine log book, stating duration extent of excessive pressure and pertinent details.

**Graphic**

Overview and instruction

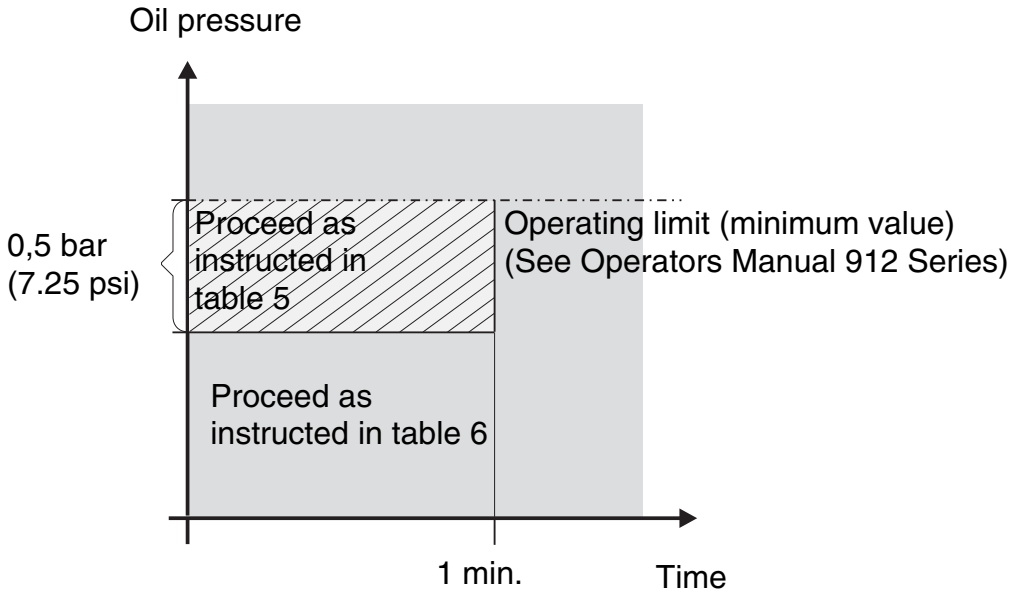


*Fig. 4* 07188

**Minimum oil pressure on the ground**

**Oil pressure below minimum oil pressure on the ground**

If noticed **on ground**, immediately stop the engine and determine the cause.

- Inspect the complete lubrication system, trace cause and rectify. See SI-912-005, latest issue.

d02877.fm

**Minimum oil pressure falls below 0.5 bar (7.25 psi) max. 1 min. in flight**

If the oil pressure falls below the minimum value up to max. 0,5 bar (7.25 psi) and for max. 1 min., the cause must be determined. Table 5.

| Oil pressure below minimum permissible oil pressure up to max. 0.5 bar (7.25 psi) max. 1min. in flight | |
|---|---|
| **Step** | **Procedure** |
| 1 | Inspect all oil lines for restrictions and clear passage. |
| 2 | Verify oil quantity. |
| 3 | Inspect pressure sensor. |
| 4 | Inspect indicating instrument to specifications of the manufacturer, replace as required. |
| 5 | Inspect crankcase pressure (See Installation Manual 912 Series, latest issue.) |
| 6 | If no cause for the low oil pressure is found after the above checks, carry out an oil change. |
| 7 | If after the previous checks and oil change the oil pressure is still too low, repair or overhaul the engine in accordance with the BRP-Powertrain instructions for continued airworthiness. |
| 8 | Inspect all systems for correct functioning. |
| 9 | Carry out detailed inspection of the affected engine components. |

**NOTICE** Replace the oil cooler and oil lines. Before the reinstallation of the engine the complete lubrication system (inclusive oil tank) must be flushed.

**Minimum oil pressure in flight more then 0.5 bar (7.25 psi)**

Consequent damage can be expected if the oil pressure falls below the minimum value more than 0.5 bar (7.25 psi). Table 6.

| Oil pressure below minimum permissible value more than 0.5 bar (7.25 psi) in flight | |
|---|---|
| **Step** | **Procedure** |
| 1 | The whole cooling system must be inspected, repaired or overhauled in accordance with the BRP-Powertrain instructions for continued airworthiness.<br>- Replace the crankshaft. |
| 2 | Carry out detailed inspection of the affected engine components. |
| 3 | Cut oil filter housing and inspect filter mat for foreign matter. |
| 4 | Inspect all further systems for correct functioning. |

d02877.fm

## 3.7) Oil specification not respected

**General note**

NOTES: An entry by the pilot in the engine log book of all pertinent details is required.

If by error engine was serviced with oil, which does not correspond with oil specification in the Operators Manual and the engine has been in operation for **less than 5 hours**, the following measures must be taken:

**less than 5 hr.**

| Oil specification not respected | |
|---|---|
| **Step** | **Procedure** |
| 1 | Oil change. |
| 2 | Remove the lowest positioned banjo screw (1) (banjo bolt, plug screw or screw socket) and drain the remaining oil from the crankcase. Screw in banjo bolt or plug screw.<br>Tightening torque see Installation Manual 912 Series. |
| 3 | Replace oil filter. |
| 4 | Drain oil completely from oil cooler. |
| 5 | Drain oil from oil tank. |
| 6 | Refill oil tank with oil as specified, refer to Operators Manual. |
| 7 | Purge air from oil system. See chap. 12-20-00, section: 11.7). |
| 8 | Run engine for approx. 1 hour and replace oil and oil filter once more, as stated above. |

**Graphic**

Position of the plug screw

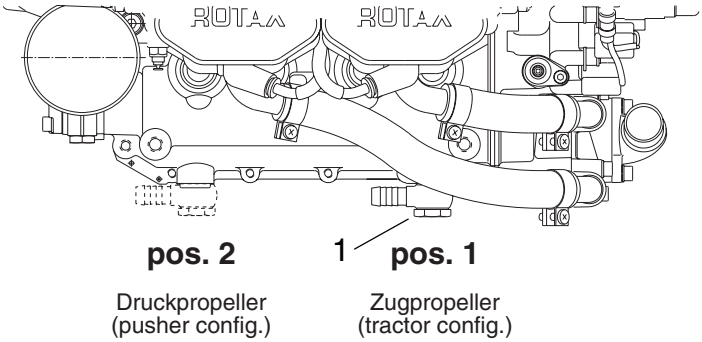


| Part | Function |
|---|---|
| 1 | plug screw |

*Fig. 5* 02712

d02877.fm

**longer than 5 hr.**

If the engine has been operated **longer than 5 hours** with engine oil not corresponding with specification in the Operators Manual the following work is required.

| Oil specification not respected | |
|---|---|
| **Step** | **Procedure** |
| 1 | Remove propeller gearbox. |
| 2 | The gearbox must be inspected, repaired or overhauled in accordance with the BRP-Powertrain instructions for continued airworthiness. |
| 3 | Carry out detailed inspection of the affected engine components. |
| 4 | Oil change. |
| 5 | Remove the lowest positioned banjo screw (1) (banjo bolt, plug screw or screw socket) and drain the remaining oil from the crankcase. Screw in banjo bolt or plug screw.<br>Tightening torque see Installation Manual 912 Series. |
| 6 | Replace oil filter. |
| 7 | Drain oil completely from oil cooler. |
| 8 | Drain oil from oil tank. |
| 9 | Refill oil tank with oil as specified, refer to Operators Manual. |
| 10 | Purge air from oil system. See chap. 12-20-00, section: 11.7). |
| 11 | Run engine for approx. 1 hour and replace oil and oil filter once more, as stated above. |

d02877.fm

## 3.8) Spark plug not in accordance with specification

**General note**

If by error any of the spark plugs were installed which are not according to specification of the engine manufacturer and/or not genuine ROTAX parts, the following verification will be necessary.

| Spark plug not in accordance with specification | |
|---|---|
| **Step** | **Procedure** |
| 1 | Mark position of the spark plugs (e.g. cyl. 1 top) and remove all spark plugs. |
| 2 | Inspect the spark plugs for damage (formation of melt beads, burn off). At heavy melt beads or bad burn off, inspect the piston dome and cylinder wall by periscope. If parts are damaged, the engine must be inspected, repaired or overhauled in accordance with the BRP-Powertrain instructions for continued airworthiness. |
| 3 | Inspect all systems for correct function. |
| 4 | Detailed inspection of affected engine components. |
| 5 | Inspect spark plug thread for damage (especially at bad burn off). |
| 6 | Differential pressure check. See chap. 12-20-00 section: 5). |
| 7 | Change oil and oil filter. |

## 3.9) Hard to turn over

**General note**

See Fig. 6.

**⚠WARNING**

Risk of electric shock!
Ignition “OFF“ and system grounded! Disconnect negative terminal of aircraft battery.

**Inspection**

Carry out inspection only on cold engine and before 1st start.

| Engine runs sluggishly | |
|---|---|
| **Step** | **Procedure** |
| 1 | Remove spark plug connector and remove 1 spark plug from each cylinder. |
| 2 | Torque must be determined with a suitable jig.<br>To do this, determine the maximum occurring torque on the propeller shaft necessary to move the whole crank drive.<br>The torque must be max. 150 Nm (110.64 ft.lb). |
| 3 | Carry out detailed inspection of the affected gearbox components. |
| 4 | Carry out detailed inspection of crank drive. |

**Graphic**

Measuring torque required to turn crank drive

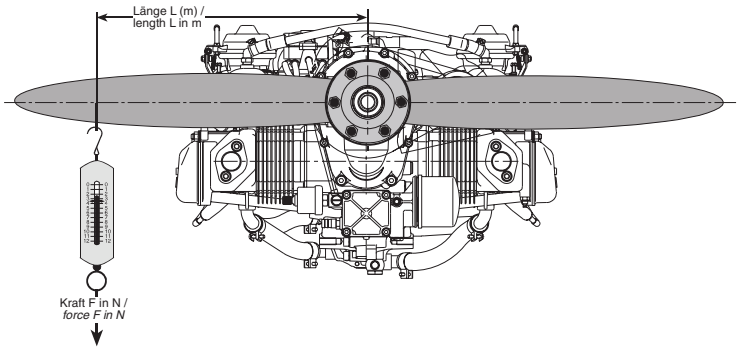


*Fig. 6* 05694

d02877.fm

## 3.10) Reporting

**General note**

According to the regulation of EASA part 21A.3 / FAR 21.3 the manufacturer shall evaluate field information and report to the authority. In case of any relevant occurrences that may involve malfunction of the engine, the form on the next page should be filled out and sent to the responsible authorized ROTAX distributor.

NOTES: The form is also available from the official ROTAX AIRCRAFT ENGINES Homepage in electronic version.

**www.rotax-aircraft-engines.com**

Register: **Document type/Diverses**

NOTES

**Form**

ROTAX®

AIRCRAFT ENGINES

**CUSTOMER SERVICE INFORMATION REPORT**

**OPER. Control No.**

**ATA Code**

1. **A/C Reg. No.**

| *Enter pertinent data* | **MANUFACTURER** | **MODEL/SERIES** | **SERIAL NUMBER** |
|---|---|---|---|
| 2. AIRCRAFT | | | |
| 3. POWERPLANT | ROTAX | | |
| 4. PROPELLER | | | |

5. SPECIFIC PART *(of component)* CAUSING TROUBLE

| Part Name | MFG. Model or Part No. | Serial No. | Part/Defect Location |
|---|---|---|---|
| | | | |

6. ENGINE COMPONENT *(Assembly that includes part)*

| Engine/Comp. Name | Manufacturer | Model or Part No. | Serial Number |
|---|---|---|---|
| | | | |

| Engine TSN | Engine TSO | Engine Condition | 7. Date Sub. |
|---|---|---|---|
| | | | |

8. Comments *(Describe the malfunction or defect and the circumstances under which it occurred. State probable cause and recommendations to prevent recurrence.)*

***Optional Information:***

Check a box below, if this report is related to an aircraft

☐ Accident; Date ☐ Incident; Date

| REP. STA | OPER | MECH | AIR TAXI | MFG | ACG | COMMUTER | OTHER |
|---|---|---|---|---|---|---|---|
| | | | | | | | |

DISTRICT OFFICE

SUBMITTED BY:

OPERATOR DESIGNATOR

TELEPHONE NUMBER: ( ) ——

*d02877.fm*

NOTES

# Chapter: 12-00-00

## MAINTENANCE OF THE SYSTEMS

**Introduction**

The section “Maintenance of the systems“ is associated with other sections. It serves only as a supplement to and further explanation of the maintenance check list (See 05-20-00).

NOTES: For reasons of clarity, only headlines and keywords are listed in the Maintenance Schedule. Please refer to the following pages for further explanation if needed.

As far as possible, the content has been arranged according to system.

**Table of contents**

This chapter of the Maintenance Manual contains the most common maintenance procedures.



d02878.fm

NOTES

# Chapter: 12-10-00

## REPLENISHING OPERATING FLUIDS

**Introduction**

The engine should always be in a horizontal position before checking the fill levels.

**Table of contents**

This chapter covers the steps required to replenish all operating fluids on the engine and also provides an overview of the fill capacities.



d02879.fm

NOTES

# 1) General

## Servicing points on the engine

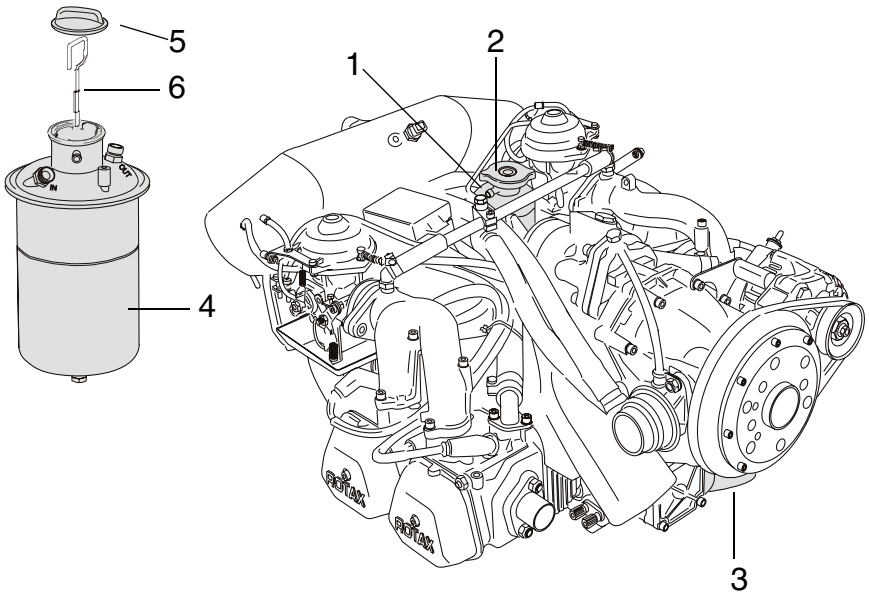


| Part | Function |
|---|---|
| 1 | Expansion tank |
| 2 | Radiator cap |
| 3 | Oil filter |
| 4 | Oil tank |
| 5 | Oil tank cover |
| 6 | Oil dipstick |

*Fig. 1* 08522

d02879.fm

NOTES

## 2) Fluid capacities

**General note**

**NOTICE** The operation of the engine may be adversely affected if non-approved or contaminated fuel, oil or coolant are used. Any mixing of different manufacturers and types should be avoided. The use of additives may result in damage.

**System**

Overview

| System | Fill capacity | Details about the operating fluids |
|---|---|---|
| Fuel system | Refer to the relevant specifications provided by the aircraft manufacturer | Refer to the corresponding chapter in the Flight Manual |
| Cooling system | approx. 1.5 l (0.4 US gal.) | Refer to the corresponding chapter in the Installation Manual |
| Oil system | MIN mark corresponds to 2.5 l (0.66 US gal.) and MAX mark corresponds to 3.0 l (0.8 US gal.) | Refer to the corresponding chapter in the Installation Manual |

NOTES

## 3) Cooling system

### 3.1) Coolant check/replenish

**General note**

**⚠WARNING** Risk of Burns!
Hot engine parts!
Always allow engine to cool down to ambient temperature before start of any work.

**⚠WARNING** Risk of Burns!
Never open the radiator cap when the cooling system is hot. For safety's sake, cover cap with a rag and open slowly. Sudden opening of the cap could provoke the escape of boiling coolant and result in scalding.

**Instruction**

See Fig. 2.

To refill the coolant the following steps are necessary.

| Step | Procedure |
|---|---|
| 1 | Open the radiator cap (1) on the expansion tank (2). |
| 2 | Check the coolant level. The coolant level must be filled up to the top (see Sketch). |
| 3 | Inspect coolant with densimeter or glycol tester. Strongly discolored or thickened coolant must be replaced. |
| 4 | ***NOTICE*** Use only coolant as recommended in the current Operators Manual.<br><br>If necessary, replenish with coolant of same composition. |
| 5 | Tighten the radiator cap by hand.<br>NOTE: The radiator cap must be tightened until the stop lug is contacted. |

**Engine test run**

Engine test run is necessary:

| Step | Procedure |
|---|---|
| 1 | Operate the engine until the temperatures have stabilized for a period of 5 min. (engine oil temperature between 50 to 70 °C (122 - 160 °F). |
| 2 | Switch the engine OFF. |
| 3 | Allow the engine to cool down. |
| 4 | Check for leaks. |
| 5 | Check the coolant level and top up with coolant as required. |

d02879.fm

**Graphic** Coolant check/replenish

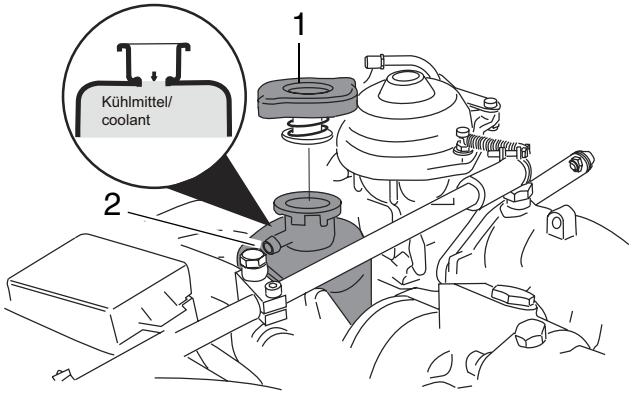


| Part | Function |
|---|---|
| 1 | Radiator cap |
| 2 | Expansion tank |

*Fig. 2* *08523*

d02879.fm

## 4) Lubrication system

### 4.1) Oil level check/Replenish

**General note**

**⚠WARNING** Risk of Burns!
Hot engine parts!
Always allow engine to cool down to ambient temperature before start of any work.

**⚠WARNING** Risk of electric shock!
Ignition “OFF“ and system grounded! Disconnect negative terminal of aircraft battery.

**Preparatory tasks**

Before checking the oil level, make sure that there is not excess residue oil in the crankcase.

**Instruction**

See Fig. 3.

For checking and before replenish proceed as follows.

| Step | Procedure |
|---|---|
| 1 | Prior to oil level check, turn the propeller several times by hand in direction of engine rotation to pump all the oil from the engine to the oil tank. |
| 2 | This process is completed when air flows back to the oil tank. This air flow can be perceived as a murmur (gurgling) when the oil tank cover (1) of the oil tank is removed. |
| 3 | Pull out the oil dipstick (2). |
| 4 | The oil level in the oil tank should be between the two marks (max./min.) on the oil dipstick, but must never fall below the min. mark. See Service Bulletin SB-912-040, "Introduction of a new oil dipstick", latest issue. |
| 5 | ***NOTICE*** For longer flights replenish oil to max. mark to warrant more oil reserve.<br><br>During standard engine operation, the oil level should be mid-way between the max. and min. marks, as at higher oil level (over servicing), oil will escape via the venting passage see also SI-27-1997, “oil level check“, latest issue. Difference between “max.“ and “min“. - mark = 0,45 l (0.95 liq.pt) |
| 6 | Replenish oil as required.<br>***NOTICE*** Only use brand name oil in accordance with the latest Operators Manual and SI-912-016, “Selection of suitable operating fluids“ latest issue. |
| 7 | Check oil level - Marks on the oil dipstick. |
| 8 | Fit the oil dipstick and tighten the oil tank cover (1) by hand. |

d02879.fm

**Engine test run**

Engine test run is necessary:

| Step | Procedure |
|---|---|
| 1 | Operate the engine until the temperatures have stabilized for a period of 5 min (engine oil temperature between 50 to 70 °C (122 - 160 °F). |
| 2 | Switch the engine OFF. |
| 3 | Allow the engine to cool down. |
| 4 | Check for leaks. |
| 5 | Check the oil level and top up with oil as required. |

**Graphic**

Oil level check/Replenish

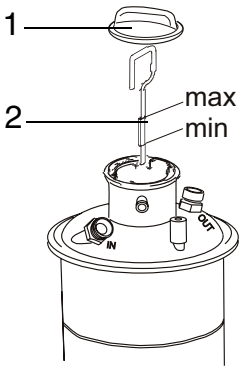


| Part | Function |
|---|---|
| 1 | Oil tank cover |
| 2 | Oil dipstick |

*Fig. 3* *08524*

*d02879.fm*

# Chapter: 12-20-00

## SCHEDULED MAINTENANCE

**Introduction**

This chapter relates in particular to the maintenance work mentioned in the Maintenance Schedule for the various engine systems and covers the work in more detail.

**Table of contents**

This chapter contains information which is required to perform scheduled servicing on the engine.

## 1) Engine cleaning

**General note**

**NOTICE** Do not use easily inflammable liquids or caustic cleaning agents for cleaning the engine.

**NOTICE** When cleaning the engine, the dissolved residues of fuel, oil and other environment-contaminating agents are rinsed off. Collect the cleaning water and dispose of it in accordance with applicable environmental regulations.

**Cleaning agents**

Use of a commercially available cold cleaning agent for the engine is recommended. See chap. 05-00-00 section: 1.5).

**Cleaning**

**NOTICE** Never clean an engine with a high pressure cleaner. This is detrimental to the electrical installations and shaft seals. Oxidation of the various components and their failure are the consequence.

**NOTICE** Before cleaning, all openings through which cleaning agents and/or dirty water could enter the engine must be closed off. Failure to do this may result in engine damage!

NOTES: Always clean engine in cold state.

If necessary, the engine must be cleaned with due care. Repair leaks as required before cleaning.

**After each cleaning**

After each cleaning procedure, dry all electrical components such as

- Battery
- Ignition unit
- Spark plug connector
- Clamp connections etc.

by use of compressed air to prevent leakage current.

NOTES

## 2) Checking air filter

**General note**

**NOTICE** In the event of dust formation, clean air filter at correspondingly shorter intervals. If filter mat is damaged, replace air filter.

**NOTICE** A dirty filter insert will not only reduce the engine performance but might also promote premature wear of the engine.

Carry out visual inspection of dry air filter after prescribed maintenance interval. Clean dirty air filter as described in aircraft manufacturers Maintenance Manual.

### 2.1) Cleaning the dry air filter

**General note**

**NOTICE** Never use gasoline, steam, caustic liquids, strong detergents, particle cleaning agents or high pressure cleaners during this step.

**NOTICE** Do not dry over naked flame, with compressed air or with hot air gun.

**Cleaning**

To clean the dry filter the following steps are necessary:
See Fig. 1 and Fig. 2.

| Step | Procedure |
|---|---|
| 1 | Lightly tap and brush off surface dirt (**A**). |
| 2 | Spray K&N filter cleaner onto filter surface and leave to soak for approx. 10 min. (**B**). |
| 3 | Rinse air filter with low pressure water from inside to outside and let element dry naturally (**C**). |

**Graphic** Cleaning of the filter

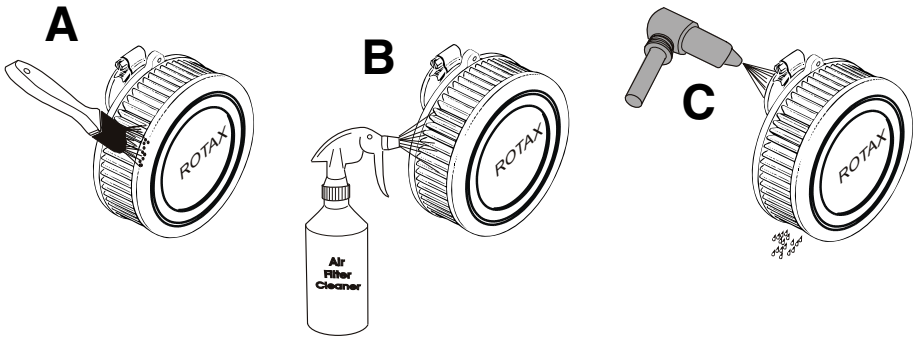


*Fig. 1* *08525*

**After cleaning**

**NOTICE** Never use gear oil, diesel or engine oil, as they attract humidity.

NOTES: Each filter pleat must be sprayed with oil.

After 5 to 10 min. the filter will be soaked with oil, noticeable by the uniform red coloring.

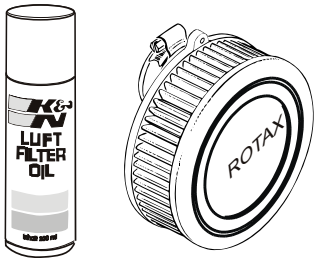


*Fig. 2* *08526*

## 2.2) Replacing the dry air filter

**General note**

See Fig. 3.

**NOTICE** Each air filter must be secured by clamp attachment and a wire securing element. See chap. 05-00-00 section: 1.6). Filter connection must be free of oil.

**NOTICE** Attach new air filter, free of grease, at connection faces, and wire-secure against loss.

**Graphic**

Only use dry type air filters which are specified by the aircraft manufacturer and from ROTAX.

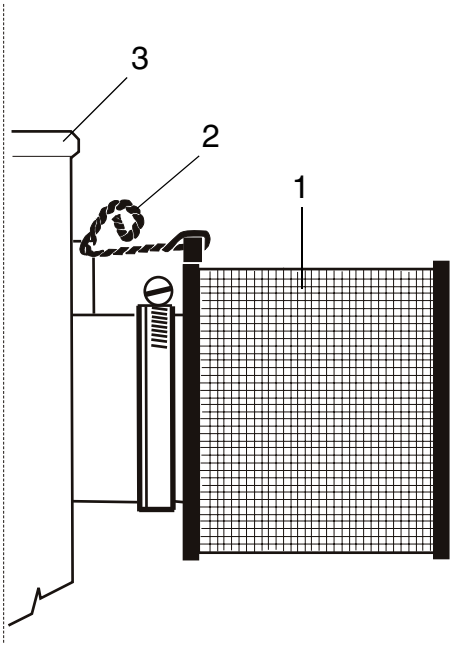


| Part | Function |
|---|---|
| 1 | Air filter |
| 2 | Safety wire |
| 3 | Carburetor |

*Fig. 3* 08527

d02880.fm

NOTES

## 3) Visual inspection

**General note**

General visual inspection of the engine for damage or abnormalities. For definition and scope of visual inspection (See chap. 05-20-00 section: 3).

**Abnormalities**

Take note of changes caused by temperature influence.

During a visual inspection you should focus on the following points in particular:

- Exhaust system
- Engine suspension frame
- Heat shrink sleeve
- Pressure sensor, temperature sensor
- Heat protection plates
- Wiring harness
- Venting hoses (carburetor, oil tank)

### 3.1) Checking the engine suspension

**General note**

**NOTICE** Exactly observe the tightening torques for screws and nuts. Overtightening or too loose connection could cause serious engine damage.

**Checking the engine suspension**

| Step | Procedure |
|---|---|
| 1 | Verify the engine suspension points on the crankcase for tight fit and damage including cracks. |
| 2 | Inspect the surroundings of engine attachment on crankcase and gearbox. If there is discoloration of the crankcase around the attachment points (black ring), there may be loose attachments. |
| 3 | Inspect engine isolating mounts including for heat damage, wear and cracks. |

## 3.2) Corrosion

**Definition**

Corrosion is a natural process which attacks and potentially damages metals via an electro-chemical reaction. For more detailed information about different types of corrosion and corresponding methods for dealing with corrosion refer to the FAA Advisory Circular AC 43.13.
See chapter “AC 43.13-1B Maintenance and Repair“.

## 4) Leakage check

**General note**

**NOTICE** Leaking connections can lead to engine problems or engine failure!

Visual inspection of the whole engine for leaks. If leaks are visible, locate the cause and remedy the fault.

**Instruction**

NOTES: If a leak is suspected, then the following check is possible:

| Step | Procedure |
|---|---|
| 1 | Cleaning the engine. |
| 2 | Operate the engine until the temperatures have stabilized for a period of 5 min (engine oil temperature between 50 to 70 °C (122 - 160 °F). |
| 3 | Switch off ignition and secure engine against unintentional operation. Secure aircraft against unauthorized operation. |
| 4 | After shut down of engine no liquid must drip down. |

**Water pump**

Checking water pump for leaks.

If the leakage bore, located at the base of the ignition housing, is dripping oil, the oil seal on the water pump shaft may be defective and must be replaced. In the case of coolant drips at the leakage bore, the coolant mechanical seal must be replaced (inspect the quality of the coolant).

**Fuel lines**

Inspect fuel lines, their connections and screw fasteners. Look for scuffing marks.

**NOTICE** Avoid overstretching the fixing elements. Always comply with the specified torque!

Detailed visual inspection specially on steel fuel lines in the area of connections (fittings) (2) for leaks and cracks is necessary. See Fig. 4.

**Graphic** Connections and fuel lines

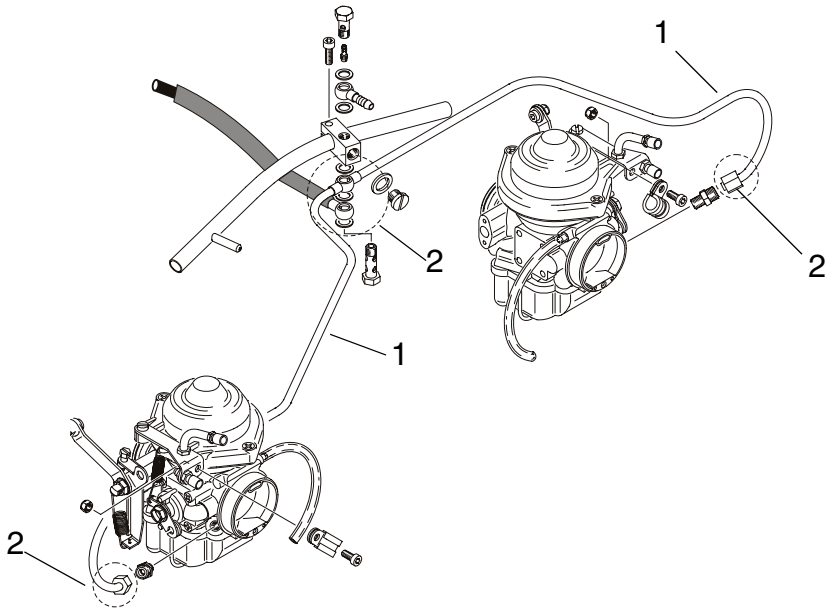


| Part | Functions |
|---|---|
| 1 | Fuel lines (Steel) |
| 2 | Connections (Fittings) |

*Fig. 4* 09034

**Fuel pump** Inspect isolating flange of fuel pump for leaks.

**Coolant hoses** Check coolant hoses and connections and fittings for leakage. Examine the surrounding area to see if there are any leaks!

**Oil lines** Inspect all oil feed lines from the oil tank to the oil cooler and to the engine. Also inspect the oil return line from the crankcase to the oil tank. Check the pressure oil line from the oil pump to the governor flange of the governor and the suction oil line from the turbocharger to the oil pump (especially in the area of the fixation screw).

**Hose clamps, kinks** Check all hoses, particularly in the area of the hose clamps and hose connections, for porosity, damage and kinks. If damage is detected, replace hose immediately.

## 5) Checking the compression

**General note**

See Fig. 5.

**⚠WARNING** Risk of electric shock!
Ignition “OFF“ and system grounded!

**Special tools**

To measure the compression pressure the following special tools and equipment are necessary.

| Part number | Description |
|---|---|
| n.a. | Compressed air approx. 6 bar (87 psi). |
| n.a. | 2 pressure gauges. |
| n.a. | Orifice jet*, of 1mm (0.04 in) inner diameter and 3 mm (0.12 in) length.<br>* or equivalent e.g. orifice diameter 0.040 in., long 0.0250 in., 60° degree approach angle according to AC43.13, latest issue. |
| n.a. | Adapter to spark plug thread. |
| n.a. | Connect line. |

**Instruction**

Testing is carried out using the **differential pressure test procedure**.

| Step | Procedure |
|---|---|
| 1 | Operate the engine until the temperatures have stabilized for a period of 5 min (engine oil temperature between 50 to 70 °C (122 - 160 °F). |
| 2 | Started with cylinder head 1 move piston to TDC position. |
| 3 | Remove the upper spark plugs. Prevent dirt or other foreigner particles from penetrating the engine (**A**). |
| 4 | Screw adaptor (1) into the spark plug thread and connect up the two pressure gauges (2) with the orifice jet (3) between them (**B**). |
| 5 | Now put constant pressure, between 5,5-6 bar (80-87 psi) on the line and take readings at pressure gauge (**C**). |
| 6 | Repeat this proceeding at all 4 cylinder heads. |

**Value**

The maximum permissible pressure drop is 25 %, e.g. from 6 to 4.5 bar (87 psi to 65 psi) (**D**).

If the pressure loss is less than 25% then the valve seats and piston rings are working properly. The spark plug has to be installed according to chap. 12-20-00 section: 14.2).

If the value is over 25% inspection, repair or overhaul must be carried out in accordance with the BRP-Powertrain instructions for continued airworthiness.

- Detailed inspection of affected engine components.

**Graphic** Checking the compression.

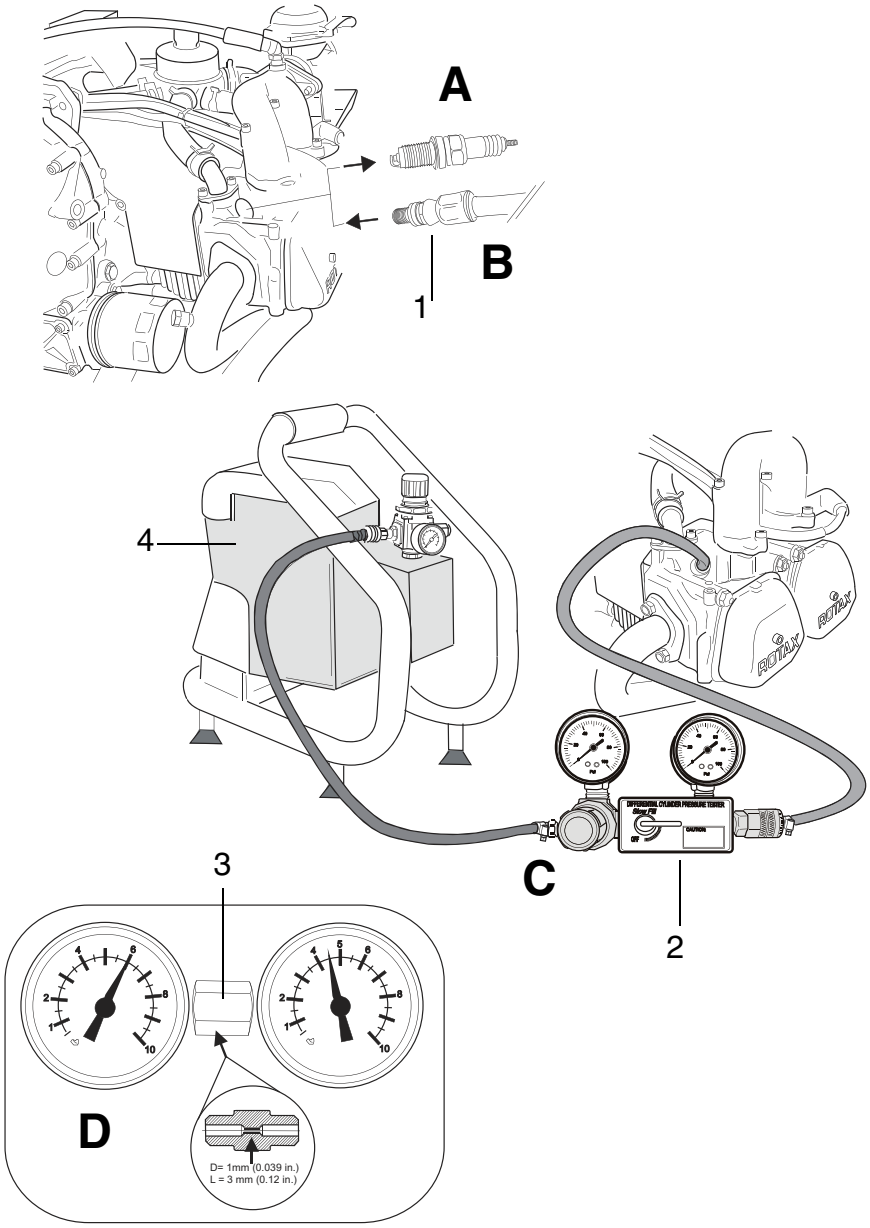


| Part | Function |
|---|---|
| 1 | Adaptor |
| 2 | Manometer/Test gauges set |
| 3 | Orifice jet |
| 4 | Compressor |

*Fig. 5* *08529*

*d02880.fm*

## 5.1) Compression check for fault-tracing

**General note**

In the course of fault-tracing a **compression check** can also be performed.

A compression tester is required to check compression. The compression should be between 9 and 12 bar (130 and 174 psi).

**Instruction**

Compression check for fault-tracing.

| Step | Procedure |
|---|---|
| 1 | Operate the engine until the temperatures have stabilized for a period of 5 min (engine oil temperature between 50 to 70 °C (122 - 160 °F). |
| 2 | Unscrew and remove top spark plugs. |
| 3 | Press compression tester (1) over the spark plug hole and use the starter to turn the engine over with open throttle until maximum pressure is reached. |
| 4 | Successively take readings on all four cylinders and compare results. |

**Measurement**

Individual readings for the cylinder must not differ by more than 2 bar (29 psi).

If the value is below 6 bar (87 psi), inspection, repair or overhaul must be carried out in accordance with the BRP-Powertrain instructions for continued airworthiness.

- Detailed inspection of affected engine components.

**Graphic**

Compression check for fault-tracing

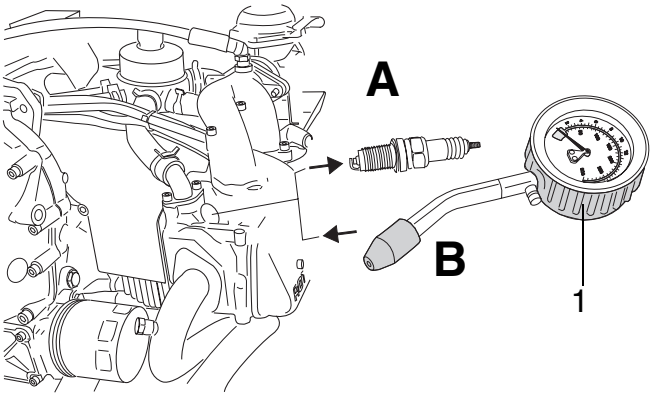


| Part | Function |
|---|---|
| 1 | Compression tester |

*Fig. 6* 08651

d02880.fm

NOTES

## 6) Checking the V-belt tension

**General note**

See Fig. 7.

In the case of configurations with additional auxiliary generator, inspect attachment and V-belt tension.

**Belt tension**

To adjust the belt tension:

| Step | Procedure |
|---|---|
| 1 | Loosen the hex. screw (1) M10 and the two M8 allen screw (2) and (3). |
| 2 | Press the alternator upwards and tighten allen screw (3). |
| 3 | Then tighten hex. screw (1) M10 with tightening torque 40 Nm (30 ft.lb) and allen screw M8 (2) with tightening torque 22 Nm (195 in.lb). |

**Graphic**

Checking the V-belt tension

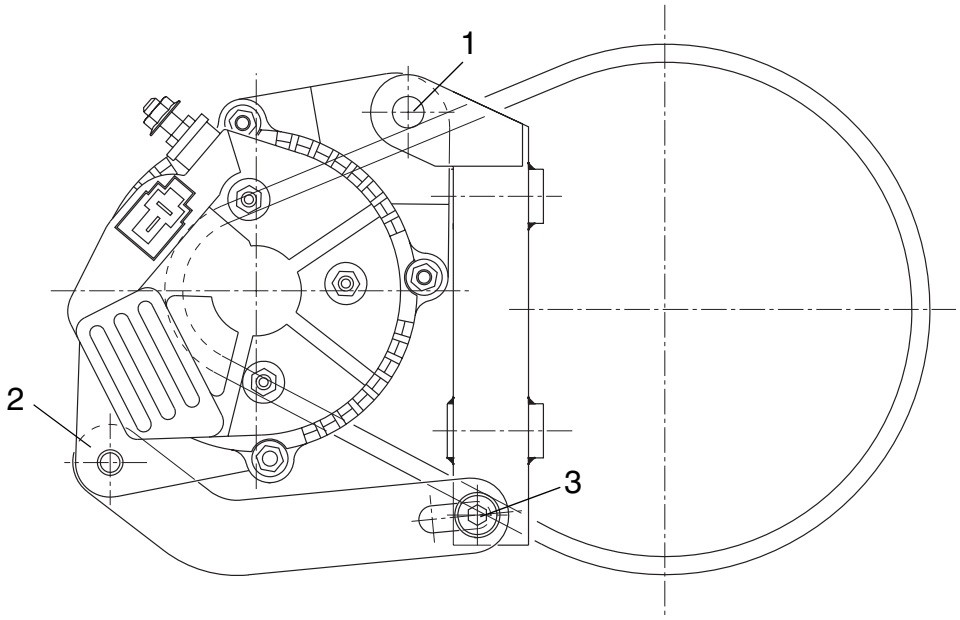


| Part | Function |
|---|---|
| 1 | Hex. screw M10 |
| 2, 3 | Allen screw M8 |

*Fig. 7* *00353*

d02880.fm

**Checking the V-belt tension**

Inspect V-belt tension as per drawing below.

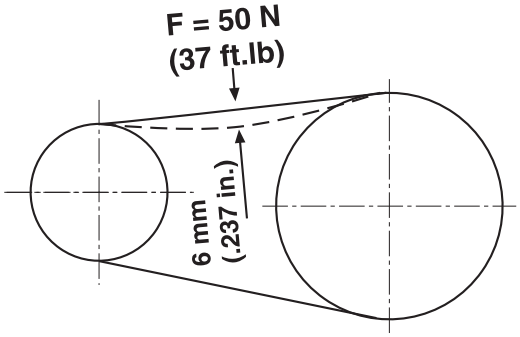


*Fig. 8* 00354

d02880.fm

## 7) Locking the crankshaft

**General note**

See Fig. 9.

NOTES: The thread bolt for crankshaft locking is part of the standard tool kit supplied with each engine.

**Locking the crankshaft**

**⚠ WARNING**

Risk of Burns!
Hot engine parts!
Always allow engine to cool down to ambient temperature before start any work.

The following work procedures are to be accomplished:

| Step | Procedure |
|---|---|
| 1 | Remove the plug screw (1) M8x20 and sealing ring from the crankcase half (cyl. 2/4). |
| 2 | Turn crankshaft/propeller shaft until the piston of cyl. no. 1 and no. 2 are in TDC position and lock crankshaft in this position with the thread bolt (2) part no. 240880.<br>NOTES: Turn crankshaft for relief the position indification until the trigger boss (3) is between the both trigger coil (4, 5) at the position.<br>The required recess position of the crankshaft can be additionally verified by looking through the crankcase recess (6) with a flash light. |
| 3 | Screw the thread bolt (2) into the crankcase. While doing so, move the crankshaft to and fro slightly with the ring spanner until the locking screw engages in the recess (6) of the crankshaft, and tighten to 10 Nm (88.48 in.lb). |

**Loosen the crankshaft**

After completion of work/check:

| Step | Procedure |
|---|---|
| 1 | Remove the thread bolt (2) and refit crankshaft plug screw M8x20 (1) along with a new sealing ring with a torque of 15 Nm (133 in.lb). |
| 2 | To check, use wrench 24 mm (15/16 inch.) to rotate the crankshaft at hex. screw (7) on the magneto side. |

**Graphic** Locking the crankshaft

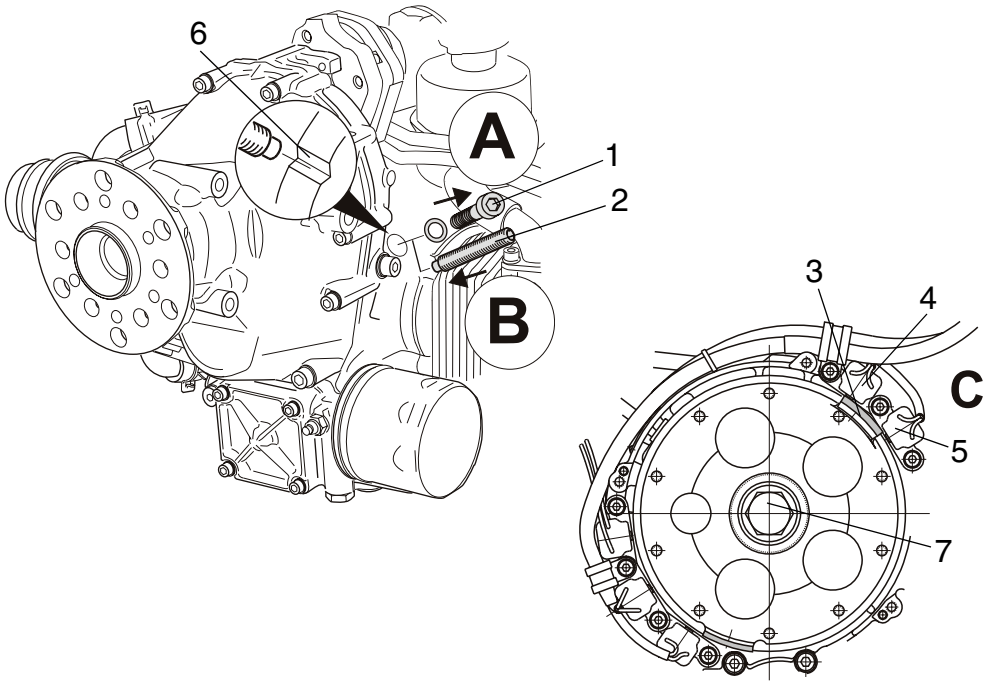


| Part | Function |
|---|---|
| 1 | Plug screw M8x20 |
| 2 | Thread bolt |
| 3 | Trigger boss |
| 4,5 | Trigger coils |
| 6 | Crankshaft |
| 7 | Hex. screw M16x1,5x40 |

*Fig. 9* *08530,08531*

## 8) Test run of engine

**General note**

**⚠WARNING** Danger of life threatening injuries caused by the propeller, rotating and stressed parts of the engine! Always observe the engine from a safe place while it is running. Check that the cockpit is occupied by a competent operator.

**Preparation**

Preparation of the engine for test run:

- Ensure that all the operating fluids (engine oil, coolant, fuel) are replenished to the specified level.
- Make sure that no loose objects (e.g. tools) are left in the engine compartment.
- Inspect tight fit of the propeller.
- Anchor the aircraft suitably to the ground and fix wheel chocks. Ensure that the propeller zone is clear and safe before starting the engine.

**Test run**

Test run as follows:

| Step | Procedure |
|---|---|
| 1 | Establish fuel supply (open fuel cock). |
| 2 | Activate choke. |
| 3 | Throttle lever to idle position. |
| 4 | Master switch “ON“. |
| 5 | Ignition for both ignition circuits “ON“. |
| 6 | Press starter switch for max. 10 sec. (followed by a cooling period of 2 min.). |
| 7 | After engine start, observe oil pressure. Oil pressure has to be built up within 10 sec. |
| 8 | Let engine run for approx. 2 min. at 2000 rpm. Then first use the throttle lever to bring the engine to approx. 2500 rpm and then run through warming up period, until the oil temperature reaches 50 °C (122 °F). |
| 9 | Check temperatures and oil pressure: At a steady oil temperature above 50 °C (122 °F) and oil pressure above 2 bar (29 psi) engine speed may be increased. |
| 10 | Ignition check as per the current Operators Manual. |
| 11 | Conduct a short full throttle run and check that the engine reaches the max. full power speed. Consult the pilot’s operating handbook for maximum speed, as it depends on the propeller used. |
| 12 | After full-load run, conduct a short cooling run to prevent formation of vapour lock in cylinder heads. This is necessary to prevent steam locks in the cooling and fuel system after shut-down. |
| 13 | Shut engine down.<br>NOTE: On switching off the engine switch off ignition and withdraw the ignition key. |

**Engine oil and coolant**

**⚠ WARNING** Risk of Burns!
Never open the radiator cap when the cooling system is hot. For safety's sake, cover cap with a rag and open slowly. Sudden opening of the cap could provoke the escape of boiling coolant and result in scalding.

Replenish engine oil and coolant as required once engine has cooled down.

**Oil filter**

***NOTICE*** If the oil filter has been replaced, re-tighten by hand after the trial run on a cold engine.

**Check of leaks**

Inspect the engine for oil, fuel or coolant leaks and repair as necessary.

# 9) Cooling system

## 9.1) Checking the cooling system

**Overview**

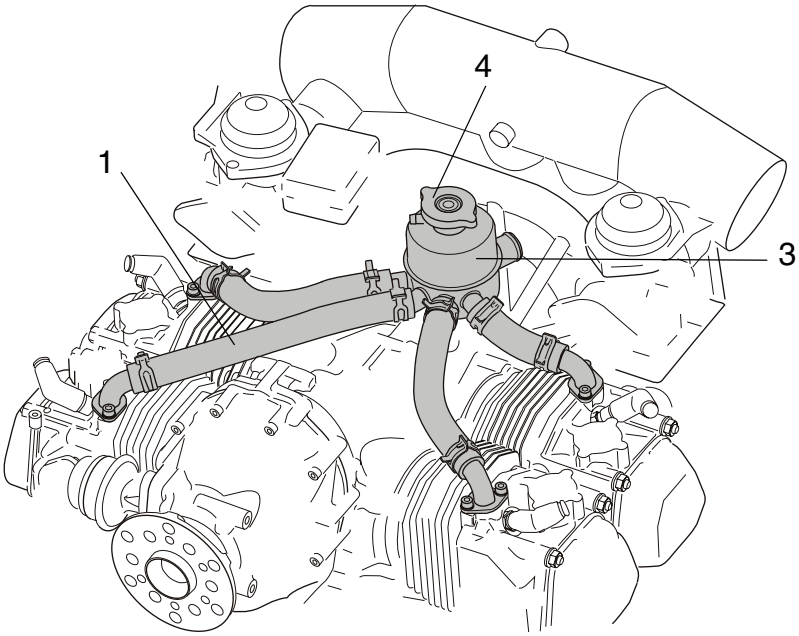


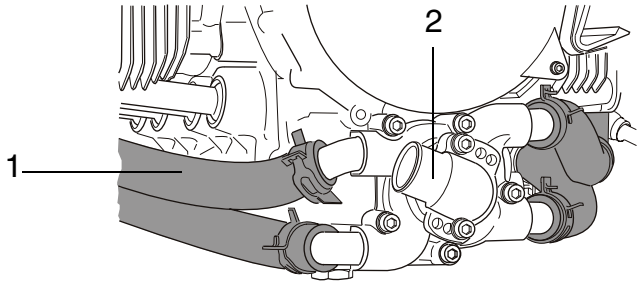


| Part | Function |
|---|---|
| 1 | Coolant lines |
| 2 | Water pump |
| 3 | Expansion tank |
| 4 | Radiator cap with gasket |

*Fig. 10* 08532

d02880.fm

**General note**

**⚠WARNING** Risk of Burns!
Hot engine parts!
Always allow engine to cool down to ambient temperature before start of any work.

See Fig. 10.

**Coolant hoses**

Carry out visual inspection of all coolant hoses (1) for damage, leaks, hardening as a result of heat and porosity.

**Water pump**

Inspect all connections on the top and bottom of the cylinder head and on the water pump (2).

**Expansion tank**

Inspect expansion tank (3) for damage. Inspect protection rubber at the bottom of the tank for tight fit.

**Radiator cap**

Inspect the gasket of the radiator cap (4) and check the pressure release valve and return valve for proper operation.

See chap. 12-20-00 section: 9.4).

## 9.2) Replacing the coolant

**General note**

**⚠WARNING** Risk of Burns!
Never open the radiator cap when the cooling system is hot. For safety's sake, cover cap with a rag and open slowly. Sudden opening of the cap could provoke the escape of boiling coolant and result in scalding.

***NOTICE*** Use only coolant as recommended in the current Operators Manual.

See Fig. 11.

**Instruction**

To replace the coolant the following steps are necessary:

| Step | Procedure |
|---|---|
| 1 | Open the radiator cap on the expansion tank. |
| 2 | Remove the bottom attachment screw (1) (with sealing ring) of water pump (2). |
| 3 | Drain the engine coolant.<br>NOTES: If the radiator is located below the engine, also detach the lowest positioned coolant hose. |
| 4 | Fit attachment screw (stainless steel) along with a new sealing ring. Tighten to 10 Nm (90 in.lb). |

d02880.fm

| Step | Procedure |
|---|---|
| 5 | If the coolant is being replaced with a different type, (conventional coolant, waterless coolant) the cooling system must be flushed. See chap. 12-20-00 section: 9.3). |
| 6 | Refill newly mixed coolant into the expansion tank (highest point of the cooling system). See chap. 12-10-00 section: 3.1). |
| 7 | Fit radiator cap. |
| 8 | NOTES: Run the engine briefly and replenish with clean coolant as required. |

**Graphic**

Replacing the coolant

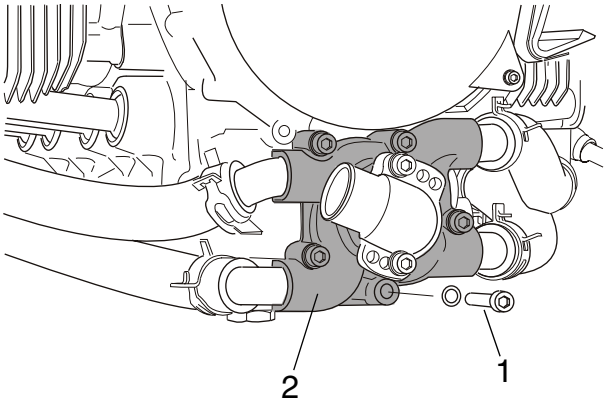


| Part | Function |
|---|---|
| 1 | Attachment screw (stainless steel) |
| 2 | Water pump |

*Fig. 11* *08533*

## 9.3) Flushing the cooling system

**General note**

**⚠WARNING** Hot steam can cause scalds in the face and on hands! Never open the radiator cap when the cooling system is hot. For safety's sake, cover cap with a rag and open slowly.

**Instruction**

To flush the coolant the following steps are necessary:

| Step | Procedure |
|---|---|
| 1 | The system is flushed using pure water at a pressure of 2 bar (29 psi).<br>***NOTICE*** Where water-free coolant is used, the cooling system must be drained of water correspondingly after flushing. The residual water must not exceed the max. permissible limit prescribed by the coolant manufacturer.<br>NOTES: For the flushing, open the lowest located coolant hose (either at water pump or radiator). |
| 2 | Refill newly mixed coolant into the expansion tank (highest point of the cooling system). See chap. 12-10-00 section: 3.1). |
| 3 | Fit radiator cap. |
| 4 | NOTES: Run the engine for a minute and replenish coolant as required. |

## 9.4) Expansion tank, radiator cap

**General note**

See Fig. 12.

To equalize pressure in the cooling system, an expansion tank is required. If the pressure in the system rises above 1.2 bar (17.4 psi) as the coolant warms up, the pressure relief valve (1) opens and the coolant can flow into the expansion tank via the line (5). When the coolant cools down, the return valve (2) opens and the coolant is sucked back.

NOTES: On older engines a radiator cap with opening pressure of 0.9 bar (13.0 psi) can be installed. See SI-912-020 “Running Modification“, latest issue.

---

**Radiator cap**

Inspect the rubber seal (3), the pressure spring (4) and the two valves incorporated in the radiator cap for damage and leaks. If necessary, replace with a new original radiator cap with 1.2 bar (17.4 psi) (6) opening pressure.

NOTES: The radiator cap must be tightened fully on the expansion tank.

---

**Expansion tank**

Inspect sealing surface (7) and tube connection (8) of the expansion tank. Carry out visual inspection of tank for damage and scuffing marks.

---

**Graphic**

Checking Expansion tank, radiator cap.

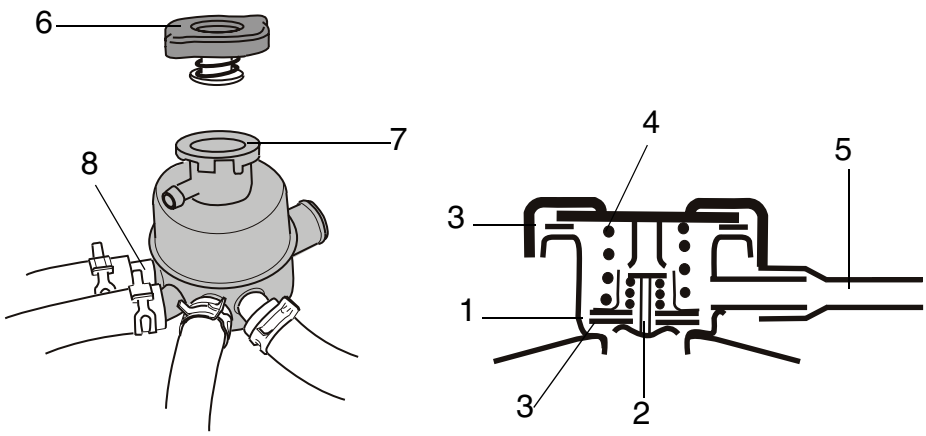


| Part | Function |
|---|---|
| 1 | Pressure relief valve |
| 2 | Return valve |
| 3 | Rubber seal |

d02880.fm

| Part | Function |
|---|---|
| 4 | Pressure spring |
| 5 | Connection to overflow bottle |
| 6 | Opening pressure of the radiator cap |
| 7 | Sealing surface |
| 8 | Tube connections |

*Fig. 12* *08534,07620*

## 9.5) Overflow bottle

**General note**

See Fig. 13.

**Instruction**

Checking overflow bottle.

| Step | Procedure |
|---|---|
| 1 | Inspect the bottle for damage. |
| 2 | Check the venting bore (1) in the screw cap (see Service Bulletin SB-912-039, “Modification of the overflow bottle“, latest issue). |
| 3 | Inspect bracket (2) for the safety wire. |
| 4 | Check hose connection (3). |

**Graphic**

Overflow bottle

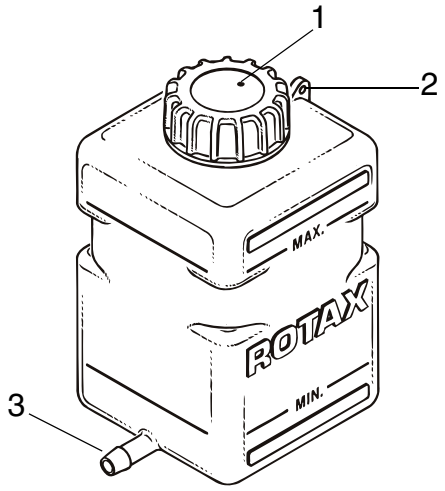


| Part | Function |
|---|---|
| 1 | Venting bore |
| 2 | Bracket |
| 3 | Hose connection |

*Fig. 13* *08536*

## 9.6) Accessories (including radiator, radiator hoses, hose clamps, cooling air ducts)

**General note**

**NOTICE** Equipment is to be inspected in accordance with the Maintenance Manual of the aircraft manufacturer.

NOTES

# 10) Fuel system

## 10.1) Carburetor synchronization

**Idle speed**

### Checking the synchronization at idle speed

See Fig. 14.

For smooth idling, synchronization of the throttle valves is necessary. When synchronizing, slacken both bowden cables (throttle lever lies close on the adjustment screw).

**Instruction**

To synchronize when idling the following steps are necessary.

| Step | Procedure |
|---|---|
| 1 | Detach the resonator hose (1) of the compensating tube (2) to separate the two air intake systems. In this condition, a slight difference in the engine running should be noticeable. |

NOTES: First the mechanical synchronization and then only the pneumatic synchronization has already been carried out.

**Graphic**

Synchronization at idle speed

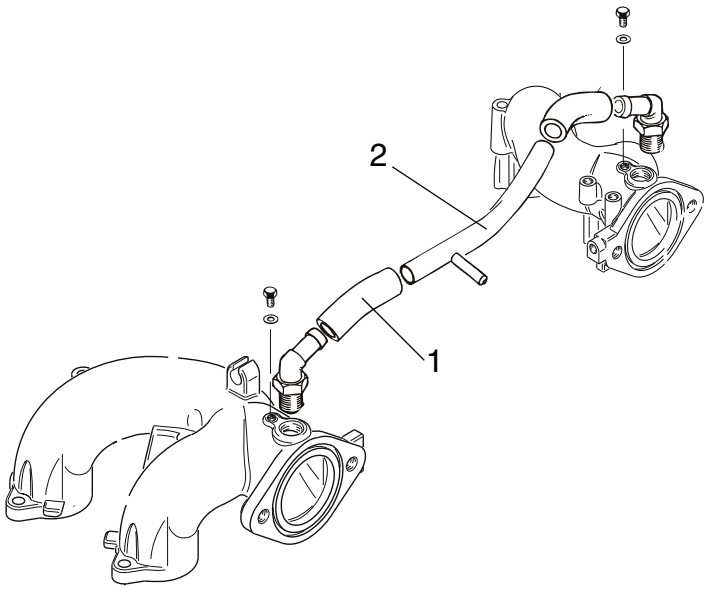


| Part | Function |
|---|---|
| 1 | Resonator hose |
| 2 | Compensating tube |

*Fig. 14* 05491

d02880.fm

## 10.2) Mechanical synchronization

**General note**

See Fig. 15.

**⚠WARNING** Danger of life threatening injuries caused by the propeller, rotating and stressed parts of the engine! Always observe the engine from a safe place while it is running.

**Basic throttle adjustment**

For synchronous basic throttle adjustment proceed as follows.

| Step | Procedure |
|---|---|
| 1 | Remove cable fixation (4) on throttle lever (1). |
| 2 | Return the throttle lever (1) to its idle stop position (3) by hand. There should be no resistance during this procedure. |
| 3 | Unscrew idle speed adjustment screw (2) until it is free of the stop. |
| 4 | Insert a 0.1 mm (0.004 in.) feeler gauge (gap X) between the idle speed adjustment screw (2) and the carburetor idle stop (3), then gently turn the idle screw clockwise until contact is made with the 0.1 mm (0.004 in.) feeler gauge. |
| 5 | Pull out the feeler gauge and then turn each idle speed adjustment screw (2) 1.5 turns counter clockwise. |
| 6 | Gently turn each idle mixture screw (6) (clockwise) until it is fully inserted and then reopen by 1.5 turns counter clockwise. |
| 7 | Check that the throttle valve opens fully automatically. |
| 8 | Adjust the two bowden cables for simultaneous opening of the throttle valves. |

Carry out the above procedure on both carburetors.

**Synchronization**

You must at this point place the throttle lever in the cockpit to the idle stop position. It is an advantage at this point to enlist the help of an assistant to ensure that the throttle lever remains in this position during the next steps of the synchronization process.

| Step | Procedure |
|---|---|
| 1 | As soon as the throttle lever in the cockpit remains is in the idle stop position, check the throttle valve lever (1) to the carburetor idle stop position (3). |
| 2 | Using the cable fixation (4), secure the bowden cable accordingly. |
| 3 | As soon as the two carburetor bowden cables are installed (throttle lever in cockpit in idle position), you must check that the idle speed adjustment screw (2) rests fully on the idle stop (3) without pressure. |

| Step | Procedure |
|---|---|
| 4 | **NOTICE** An idle speed which is too low can result in gearbox wear, and if the idle speed is too high, the engine is harder to start.<br><br>Start the engine and verify the idle speed. If the idle speed is too high or too low, adjust accordingly with idle speed adjustment screw (2). |
| 5 | Check the true running of the engine. If necessary, adjust with the idle mixture screw (6).<br>See chap. 12-20-00 section: 10.5). |

Carry out the above procedure on both carburetors.

**Graphic**

Mechanical synchronization

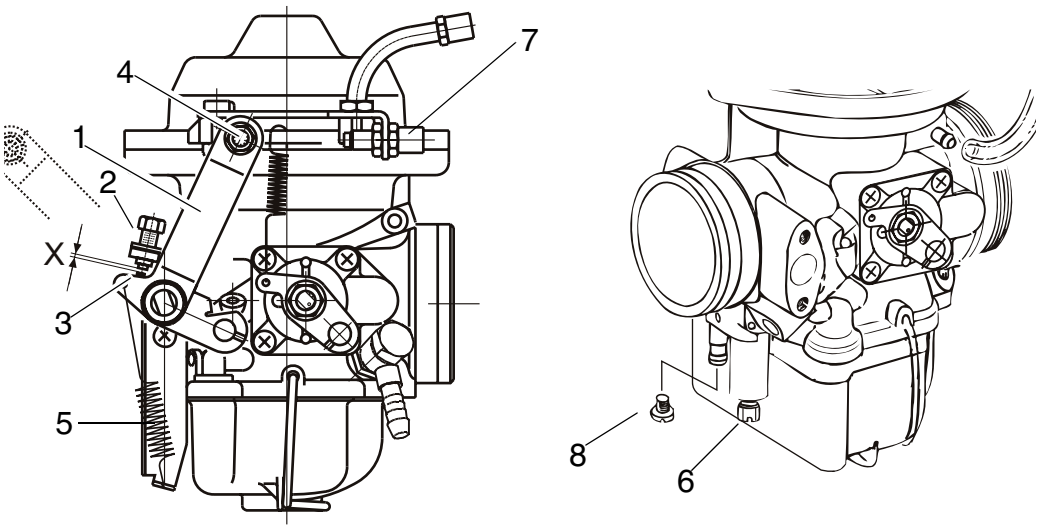


| Part | Function |
|---|---|
| 1 | Throttle valve lever |
| 2 | Adjustment screw |
| 3 | Idle stop position |
| 4 | Cable fixation |
| 5 | Return spring |
| 6 | Idle mixture screw |
| 7 | Idle adjustment |
| 8 | Plug screw M3.5x5 |

*Fig. 15* 08538

d02880.fm

## 10.3) Pneumatic synchronization

**General note**

See Fig. 16 to Fig. 19.

**⚠WARNING** Danger of life threatening injuries caused by the propeller, rotating and stressed parts of the engine! Always observe the engine from a safe place while it is running.

NOTES: Perform a mechanical synchronization before attempting a pneumatic synchronization.

**Special tool**

The two carburetors are adjusted to equal flow rate at idling with a suitable flow meter or vacuum gauge(s).

**Connection**

Possible connection methods.

| Option 1 | |
|---|---|
| **Step** | **Procedure** |
| 1 | Remove the compensating tube (2) from the push on angular tube (4) after removing the two clamp (3). |
| 2 | Using the push on angular tube (4) and compensating tube (2) install a flexible rubber hose (5) leading to the vacuum gauge (1). |

**Graphic**

Option 1

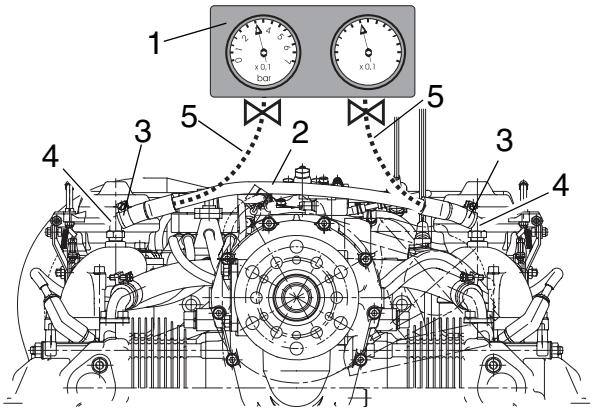


| Part | Function |
|---|---|
| 1 | Vacuum gauge |
| 2 | Compensations tube |
| 3 | Clamp |
| 4 | Angular tube |
| 5 | Rubber hose |

*Fig. 16* 08652

d02880.fm

| Option 2 | |
|---|---|
| **Step** | **Procedure** |
| 1 | Remove one end of the compensating tube (2) and tube (3) from the push on angular tube (5) after removing the two tension clamp (4). |
| 2 | Using the push on angular tube (5) and compensating tube (2) install a flexible rubber hose (6) leading to the vacuum gauge (1). |

**Graphic**

Option 2

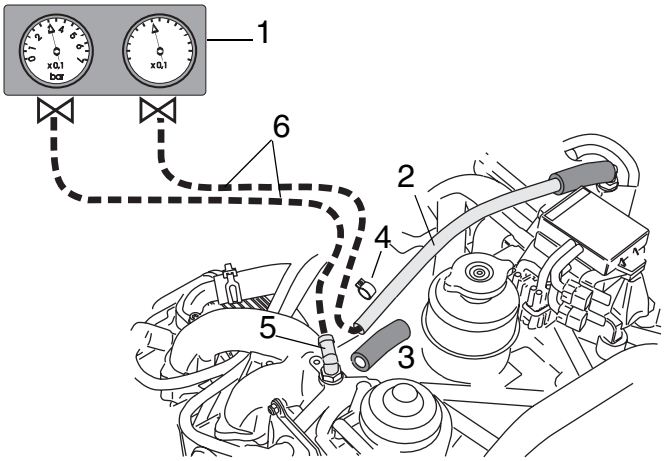


| Part | Function |
|---|---|
| 1 | Vacuum gauge |
| 2 | Compensating tube |
| 3 | Tube |
| 4 | Clamp |
| 5 | Angular tube |
| 6 | Rubber hose |

*Fig. 17* *08659*

| Option 3 | |
|---|---|
| **Step** | **Procedure** |
| 1 | Remove hex. screw (1) M6x6 from intake manifold (2) and connect the vacuum gauge. |
| 2 | Remove the compensating tube (3) with attached tubes (4) (connection between intake manifolds) and plug the fittings in the intake manifolds. |
| 3 | After synchronization tightened the screw M6x6 (1) with LOCTITE 221. |

**Graphic**

Option 3

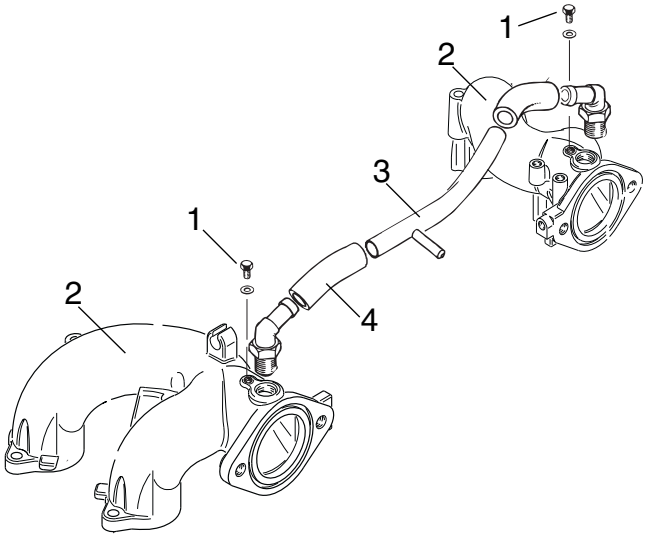


| Part | Function |
|---|---|
| 1 | Hex. screw M6x6 |
| 2 | Intake manifold |
| 3 | Compensating tube |
| 4 | Tube |

*Fig. 18* *08660*

| Option 4 | |
|---|---|
| **Step** | **Procedure** |
| 1 | Install the vacuum gauge. |
| 2 | Clamp the tube (2) with hose clamping pliers (1). Observe the position! The compensation tube (3) must not removed. |
| 3 | Unscrew the screw (4). |
| 4 | Install the hose nipple M6 (5) with the sealing ring (6). |
| 5 | After synchronization tightened the screw M6x6 (4) with LOCTITE 221. |

**Graphic**

Option 4

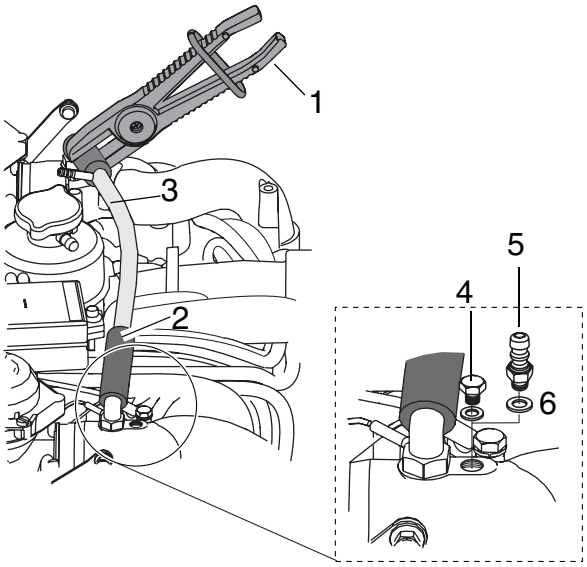


| Part | Function |
|---|---|
| 1 | Clamping pliers |
| 2 | Tube |
| 3 | Compensation tube |
| 4 | Screw |
| 5 | Hose nipple |
| 6 | Sealing ring |

*Fig. 19* *08661*

### 10.3.1) Idle speed check

**General note**

Before proceeding, secure the aircraft on the ground using wheel chocks and ropes.

**⚠ WARNING** Risk of life threatening injuries caused by propeller! Secure the propeller region before test run watch it. Secure a safe area around propeller during test run.

Start the engine and verify the idle speed. If necessary correct as per chap. 12-20-00 section: 10.5).

| Setting of more than 1/2 turn |
| --- |
| If a setting of more than 1/2 turn is required, repeat mechanical synchronization to prevent too high a load on the idle stops. If the idle speed is too high, the maximum the idle screw can be unscrewed is complete turn. |

**No satisfactory result**

If an unsatisfactory result is achieved, inspect the idle jets for contamination and clean if necessary.

***NOTICE*** Also check for translucent, jelly-like contamination. Inspect for free passage.

### 10.3.2) Operating range check

**General note**

Once the proper idling speed has been established, it is necessary to check the **operating range above the idle speed**.

First establish that the engine is developing full take-off performance or take-off rpm when selected in the cockpit. Then the setting of the operating range (idle to full throttle) can be checked or adjusted.

**Procedure**

To control the operating range above idling the following steps are necessary. See Fig. 20.

| Step | Procedure |
|---|---|
| 1 | Start and warm up engine (See Operators Manual). Select full power and check that both pressure gauges are registering the same readings.<br>If the same reading is not made on both gauges.<br><br>**Step** / **Procedure**<br>1 — Shut down the engine.<br>2 — Check that carburetor actuation effects full travel and that starting carburetors (choke) are in the full off position.<br>3 — If necessary, fit/modify the carburetor actuation as required to achieve full power on both carburetors. |
| 2 | Once full power has been established on both carburetors, retard the throttle and observe the pressure gauge settings. The pressure gauges should show the same reading for both carburetors.<br>NOTES: Discrepancies must be compensated for by adjusting the off idle adjustment (1).<br><br>**Step** / **Procedure**<br>1 — Shut down the engine.<br>2 — Loosening the locknut on the bowden cable and adjusting the off idle adjustment.<br>3 — Tightening the locknut.<br>4 — Re-testing the engine. |
| 3 | Final idle speed adjustment may be required by resetting the idle speed adjustment screws (2). |
| 4 | Equal adjustment must be made on both carburetors. |
| 5 | Any major adjustments required necessitate replaced verification of all parameters mentioned in this procedure. |

d02880.fm

**Assembly**

**NOTICE** Follow the instructions of the instrument manufacturer.

- Install compensation tube assy. on engine in reverse sequence of removal. Any minor differences in balance at idle speed will be compensated for.
- Refit the screw plug M3.5 (3) and hex. screws M6x6 with gasket (pos. 1 Fig. 18).

**Graphic**

Inspect operating range/idle speed

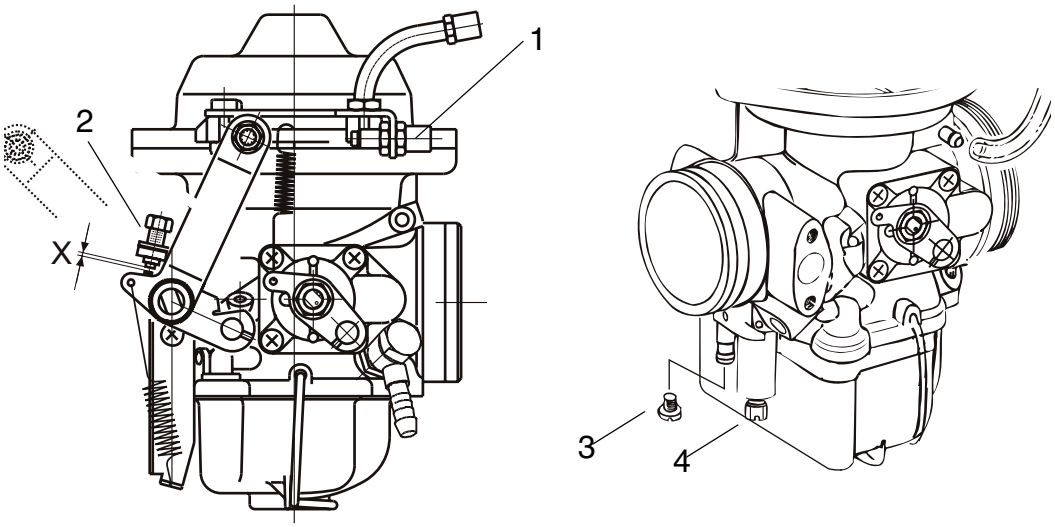


| Part | Function |
|---|---|
| 1 | Idle adjustment |
| 2 | Idle speed adjustment screw |
| 3 | Screw plug M3.5x5 |
| 4 | Idle mixture screw |

*Fig. 20* 08538

d02880.fm

## 10.4) Checking of the float chamber

**General note**

See Fig. 21.

**⚠WARNING**

Risk od Burns!
Hot engine parts!
Always allow engine to cool down to ambient temperature before start of any work.

**Instruction**

To check of the float chamber the following steps are necessary:

| Step | Procedure |
|---|---|
| 1 | Remove drip tray (1). |
| 2 | Open spring clip (2). |
| 3 | Remove float chamber (3) with gasket (4) and both float. |
| 4 | Remove both float (5) from the float chamber. |
| 5 | Inspect the float chamber for contamination and corrosion. |

***NOTICE***

If any contamination on float chamber the find out what the cause is and take corresponding action to rectify the problem. Inspect and clean the complete fuel system including carburetor.

| Step | Procedure |
|---|---|
| 6 | Assembly at the float chamber should be carried out analogously the disassembly. |
| 7 | Adjust with the idle speed adjustment.<br>See chap. 12-20-00 section: 10.5). |

**Graphic** Float chamber

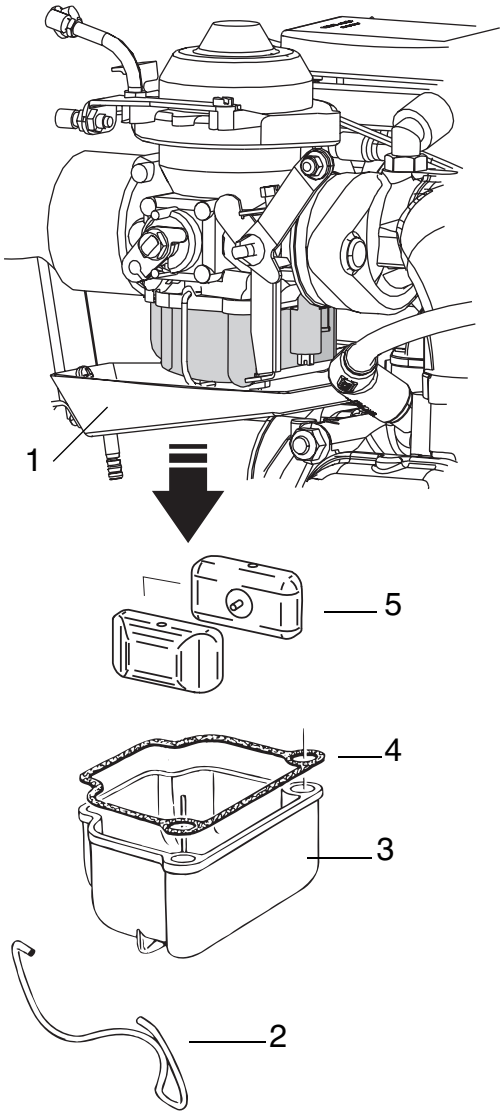


| Part | Function |
|---|---|
| 1 | Drip tray |
| 2 | Spring clip |
| 3 | Float chamber |
| 4 | Gasket |
| 5 | Float |

*Fig. 21* 08653

d02880.fm

## 10.5) Idle speed adjustment

**General note**

See Fig. 20.

**NOTICE** If satisfactory idle speed adjustment cannot be achieved, inspection of the idle jet or additional pneumatic synchronization will be necessary.
See chap. 12-20-00 section: 10.3).

**Idle adjustment**

Always carry out idle speed adjustment when the engine is warm.

- Basic adjustment of the idle speed is first effected using the idle speed adjustment screw (2) of the throttle valve.
  See chap. 12-20-00 section: 10.2).

**Optimizing engine running**

Necessary only if not taken care of at synchronization.

| Step | Procedure |
|---|---|
| 1 | Close idle mixture screw (4) by turning clockwise to screw in fully and then opening again by 1.5 turns counter clockwise. |
| 2 | Starting from this basic adjustment, the idle mixture screw (4) is turned until the highest idle speed is reached. |
| 3 | The optimum setting is the middle between the two positions at which an rpm. drop is noticed. |
| 4 | Then readjustment of the idle speed is carried out using the idle speed adjustment screw (2) and if necessary, by slightly turning the idle mixture screw again.<br>NOTES: Turning the idle mixture control screw in clockwise direction results in a leaner mixture and turning counter clockwise in a richer mixture. |

## 10.6) Checking the carburetor actuation

**General note**

See Fig. 22.

Route bowden cables in such a way that carburetor actuation will not be influenced by any movement of engine or airframe, thus possibly falsifying idle speed setting and synchronization.

NOTES: Each carburetor is actuated by two bowden cables. At position (1) connection for throttle valve, and at position (2) connection for choke actuation.

**⚠ WARNING** Risk of life threatening injuries caused by propeller! Adjust bowden cables so that the throttle valve and the choke actuation of the starting carburetor can be fully opened and closed. Bowden cables and lever must not jam!

**⚠ WARNING** Risk of life threatening injuries caused by propeller! With carburetor actuation not connected, the throttle valve is fully open. The initial position of the CD carburetor is **full throttle**! So never start the engine with the actuation disconnected.

**Procedure**

To test the carburetor actuation the following steps are necessary:

| Step | Procedure |
|---|---|
| 1 | Inspect bowden cables and levers for free movement. |
| 2 | Bowden cable must allow full travel of lever from stop to stop. |
| 3 | Adjust throttle cables to a clearance of 1mm (0.04 in). |
| 4 | Inspect and lubricate linkage on carburetor and carburetor joints with engine oil. |
| 5 | Inspect return springs (3) and inspect engagement holes for wear. |

**Graphic** Checking the carburetor actuation

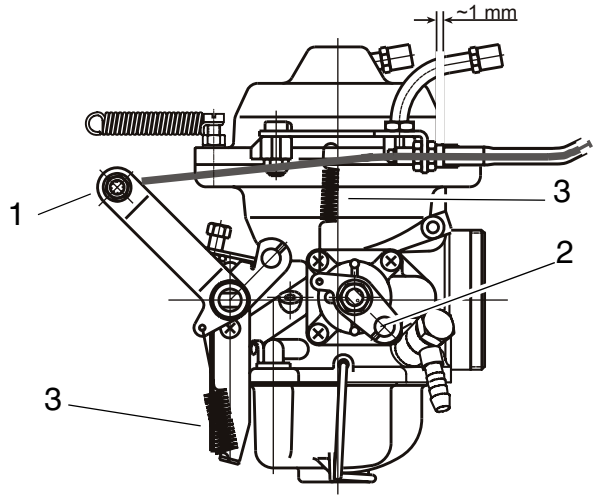


| Part | Function |
|---|---|
| 1 | Connection for throttle valve |
| 2 | Connection for choke actuation |
| 3 | Return springs |

*Fig. 22* *00352*

NOTES

# 11) Lubrication

## 11.1) General

**Overview**

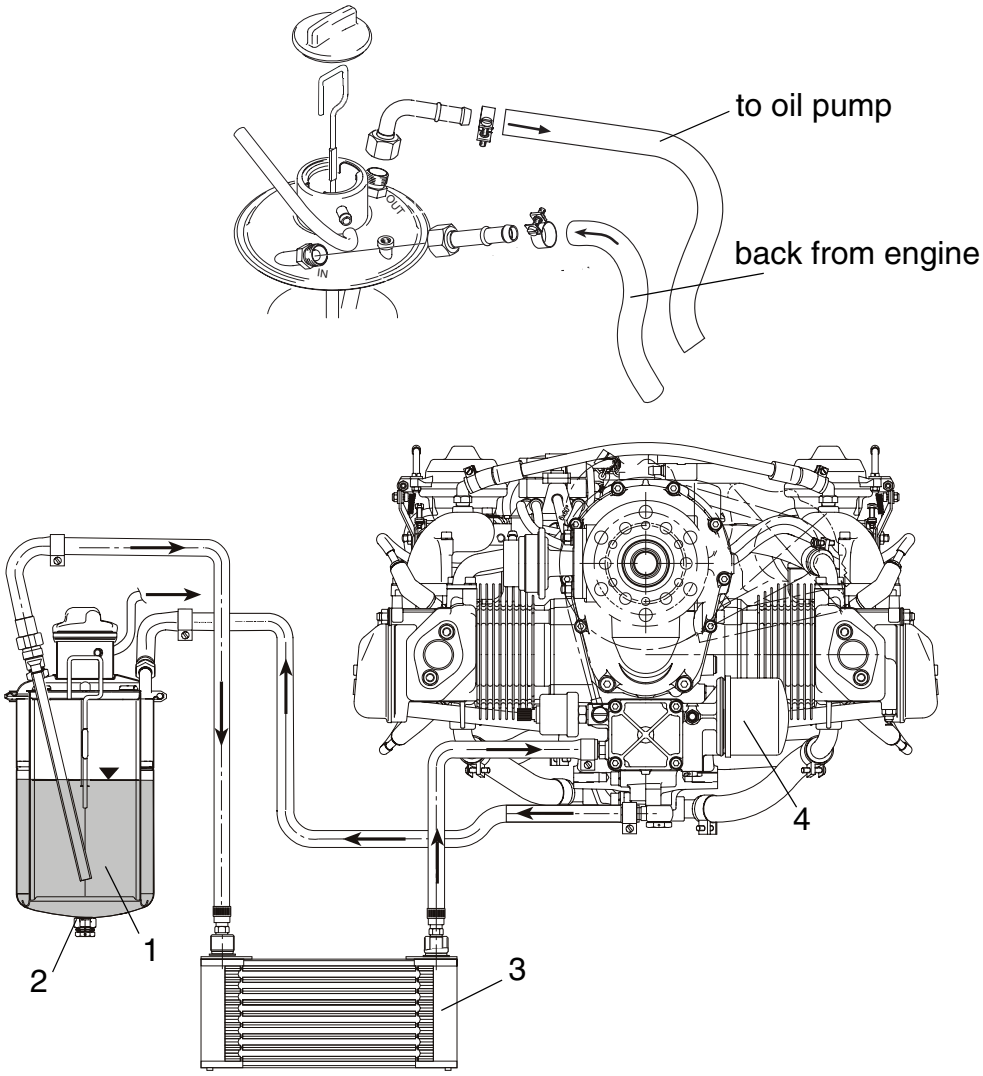


| Part | Function |
|---|---|
| 1 | Oil tank |
| 2 | Drain screw M12x12 |
| 3 | Oil cooler |
| 4 | Oil filter |

*Fig. 23*

*05448,08238*

*d02880.fm*

**General note**

For detailed information see SI-912-010 “oil change“, latest issue, and Fig. 23.

**⚠WARNING**

Risk of Burns!
Hot engine parts!
Always allow engine to cool down to ambient temperature before start of any work.

**⚠WARNING**

Risk of electric shock!
Switch off ignition and remove key! Disconnect negative terminal of aircraft battery.

NOTES: It is advisable to check the oil level prior to an oil change as it informs about oil consumption.
See chap. 12-10-00 section: 4.1).

---

**Observe!**

***NOTICE***

Observe the following to prevent possible unintentional voiding of the oil system and damage to the valve drive:

- Draining the suction lines, oil cooler and return line is not necessary and must be avoided, as it results in air entering the oil system.
- Replacement of the oil filter and the oil change should be effected quickly and without interruption to prevent a draining of the oil system and the hydraulic tappets.

---

**Oil lines, Oil connections**

Oil lines and other oil connections are not normally removed.

---

## 11.2) Oil change

**Procedure**

NOTES: Run engine to warm oil before beginning oil change procedure.

To change the oil the following steps are necessary:

| Step | Procedure |
|---|---|
| 1 | Crank engine by hand to transfer the oil from the crankcase.<br>See chap. 12-10-00 section: 4.1). |
| 2 | Remove safety wire and oil drain screw from the oil tank, drain the used oil and dispose of as per environmental regulations. |
| 3 | Replace oil filter at each oil change and inspect the filter insert.<br>See chap. 12-20-00 section: 11.5). |
| 4 | Dispose of oil filter according to environmental regulations. |
| 5 | Pour in approx. 3l (0.8 gal (US)) of fresh oil. |

**NOTICE** Only use brand name oil in accordance with the latest Operators Manual and SI-912-016, “Selection of suitable operating fluids“ latest issue.

**NOTICE** The engine must not be cranked when the oil system is open. Attention must also be paid to this before first commissioning (e.g. when assembling the propeller after correct venting of the oil system).

| Step | Procedure |
|---|---|
| 6 | Install oil drain screw with safety wire. |
| 7 | After carrying out the oil change, the engine should be cranked by hand in the direction of engine rotation (approx. 20 turns) to completely refill the entire oil circuit. |
| 8 | Compressed air must not be used to blow through the oil system (or oil lines, oil pump housing, oil bores in the housing). |

## 11.3) Oil filter replacement

**General note**

**⚠WARNING** Risk of Burns!
Hot engine parts!
Always allow engine to cool down to ambient temperature before start of any work.

***NOTICE*** To ensure correct functioning of the oil circuit and the forced flow lubrication, use genuine ROTAX oil filter only. Only these filters will ensure correct pressure in the by-pass valve.

At every oil change, unscrew the oil filter and cut open using special tool taking care not to produce chips.

**Special tool**

To carry out the procedure the following steps are necessary:

| part number | Description |
|---|---|
| part no. 877620* | (1) Oil filter wrench |
| part no. 877670* | (2) Cutting tool |
| * or equivalent | |

**Graphic**

Special tool

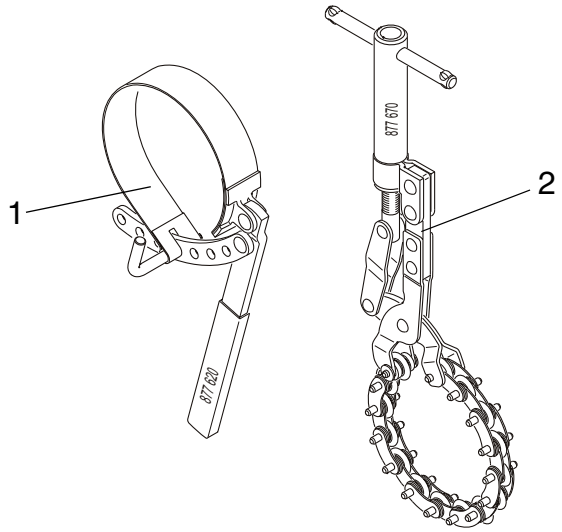


*Fig. 24* 02734

**Procedure**

Unscrew the oil filter.

| Step | Procedure |
|---|---|
| 1 | Unscrew the oil filter with the oil filter wrench |

d02880.fm

## 11.4) Install oil filter

**General note**

See Fig. 25.

**NOTICE** After test run inspect tight fit of oil filter.

**Procedure**

To mount the oil filter the following steps are necessary:

| Step | Procedure |
|---|---|
| 1 | Clean the contact surface (1) of the oil pump housing (2) with a clean cloth. |
| 2 | Apply thin film engine oil on the gasket (3) of the oil filter (4). |
| 3 | Install the oil filter on the engine. |
| 4 | Screw on oil filter until oil filter gasket is seated solidly. |
| 5 | Tighten oil filter with 3/4 turn (270°). |

Inspect all systems for correct function.

**Graphic**

Install oil filter.

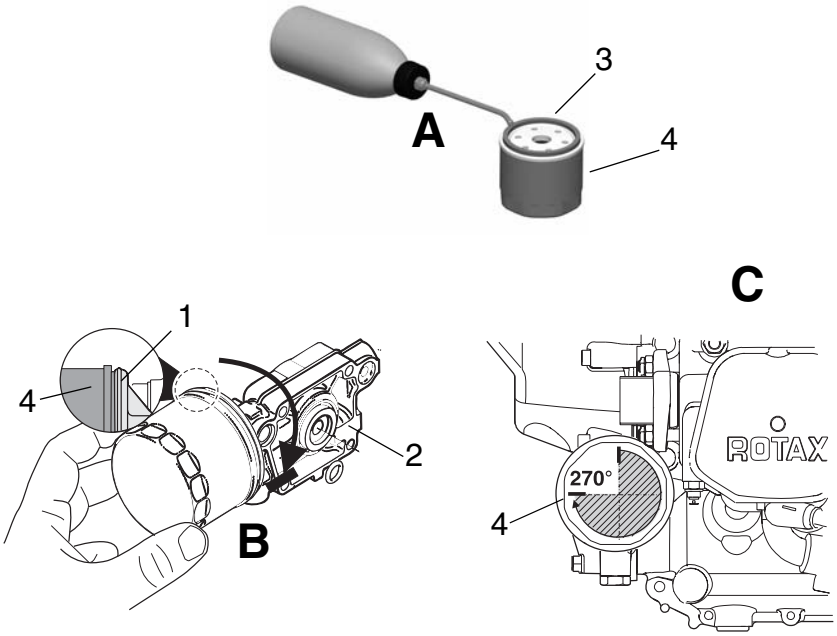


| Part | Function |
|---|---|
| 1 | Contact surface |
| 2 | Oil pump housing |
| 3 | Gasket |
| 4 | Oil filter |

*Fig. 25* 08550

d02880.fm

## 11.5) Inspection of the filter insert

**General note**

**NOTICE** The filter insert must be inspected carefully for metal chips.

This inspection is important as it allows conclusions to be drawn regarding the internal condition of the engine and provides information about the possible cause of any damage.

**Procedure**

To carry out the procedure the following steps are necessary:

| Step | Procedure |
|---|---|
| 1 | Oil filter cut open using special tool taking care not to produce chips. |
| 2 | Remove filter insert. |
| 3 | Cut top and bottom edges off the mat with a knife. |
| 4 | Remove filter mat, fold up and press remaining oil out. |
| 5 | Unroll and inspect it for metal chips, foreign matter, contamination and abrasion. |
| 6 | Pass over matt with a clean magnet and inspect for metal. |

**Possible foreign matter**

**Possible foreign matter:**

- Steel chips
- Bronze chips
- Aluminium chips
- Sliver of bearing material
- Remains of sealing compound

**Increased foreign matter**

If an increased amount of metal particles is found, such as brass- or bronze chips or sliver from bearing abrasion, repair or overhaul the engine in accordance with the BRP-Powertrain instructions for continued airworthiness. If the filter mat is clogged by foreign matter, the lube oil reaches the bearing points unfiltered via the by-pass valve in the oil filter.

**Unclear findings**

In the case of unclear findings:

| Step | Procedure |
|---|---|
| 1 | Flush the oil circuit. |
| 2 | Fit a new oil filter. |
| 3 | Engine test run. See chap. 12-20-00 section: 8). |
| 4 | Inspect the oil filter once more. |

**Contaminated**

**NOTICE** If the oil circuit is contaminated, replace the oil cooler and flush the oil circuit. See chap. 12-20-00 section: 13). Proper judgement requires years of experience in repair of piston engines.

**Graphic**

Oil filter

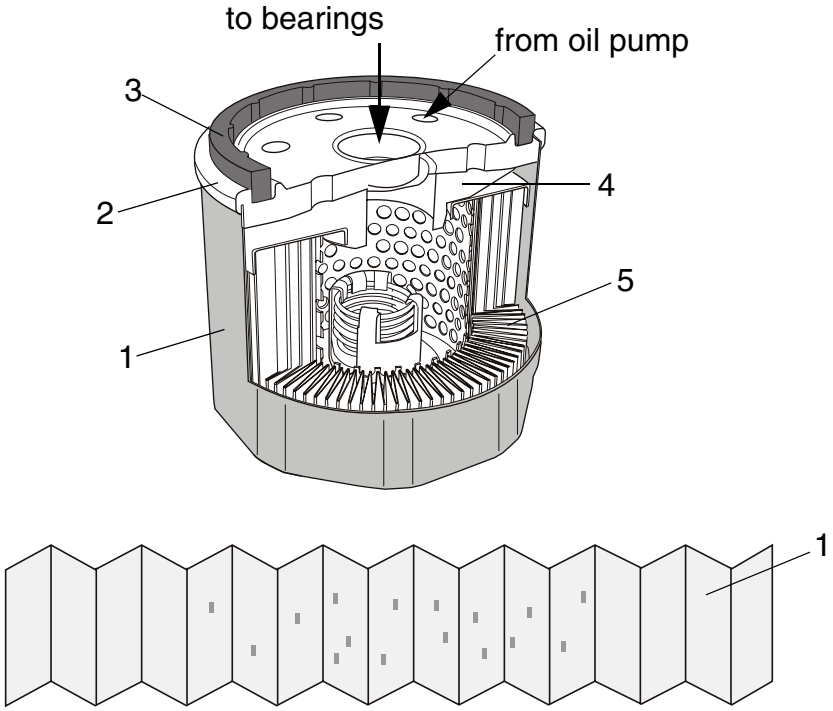


| Part | Function |
|---|---|
| 1 | Filter housing |
| 2 | Filter cover |
| 3 | Gasket ring |
| 4 | Filter element |
| 5 | Filter mat |

*Fig. 26* *08427,00181*

## 11.6) Cleaning the oil tank

See Fig. 27.

**General note**

NOTES: This procedure is optional and requires venting of the oil system. See chap. 12-20-00 section: 11.7).

It is only necessary to clean the oil tank and the inner parts if there is heavy oil contamination.

**Procedure**

Procedure to clean the oil tank:

| Step | Procedure |
|---|---|
| 1 | Detach the profile clamp (2) and remove the oil tank cover (3) together with the O-ring (4) and the oil lines. |
| 2 | Remove the inner parts of the oil tank such as the baffle insert (5) and the partition (6). |
| 3 | Clean oil tank (8) and inner parts (5, 6) and check for damage. |

**NOTICE** Incorrect assembly of the oil tank components can engine faults or engine damage.

| Step | Procedure |
|---|---|
| 4 | Fit drain screw (1) M12x12 with a new gasket ring.Tighten to 25 Nm (18.5 ft.lb). |
| 5 | Safety wire. |
| 6 | Reassemble the oil tank by following the same steps in reverse order. |

**Graphic** Cleaning the oil tank

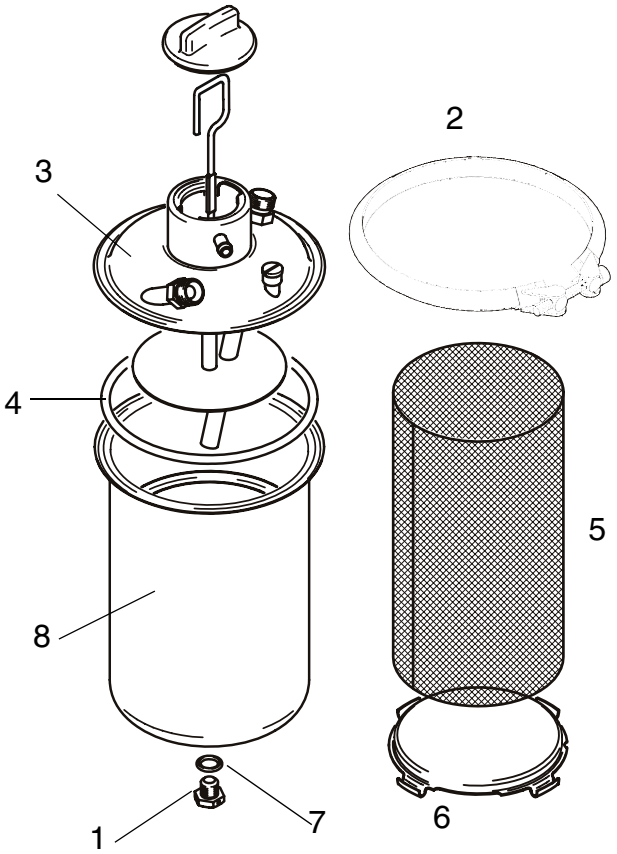


| Part | Function |
|---|---|
| 1 | Drain screw |
| 2 | Profile clamp |
| 3 | Oil tank cover |
| 4 | O-ring |
| 5 | Baffle insert |
| 6 | Partition |
| 7 | Gasket ring |
| 8 | Oil tank |

*Fig. 27* *05556*

## 11.7) Purging the oil system

**General note**

**NOTICE** Purging of the oil system is extremely important for operation and service life of the engine and therefore the procedure must be followed meticulously. It must be carried out in accordance with SI-912-018,“Purging the lubrication system“, latest issue.

**Procedure**

Purging the oil system is necessary:

- before each first start up
- after reinstallation (e.g. after overhaul)
- after maintenance work during which the lubrication system was opened and voided.

## 12) Inspecting the magnetic plug

**General note**

See Fig. 28.

NOTES: The magnetic plug is located on the crankcase between cylinder 2 and gearbox.

This inspection is important because it allows conclusions to be drawn on the internal condition of the gearbox and engine and reveals information about possible damage.

**Procedure**

Remove the magnetic plug and inspect it for accumulation of chips.

**Steel chips in low numbers**

Steel chips in low numbers as depicted in Fig. 28 can be tolerated if the accumulation is below 3 mm (0.125 in).

**Steel chips in larger numbers**

If there are larger accumulations of metal chips on the magnetic plug, the engine must be repaired or overhauled in accordance with the BRP-Powertrain instructions for continued airworthiness.

**Unclear findings**

In the case of unclear findings:

| Step | Procedure |
|---|---|
| 1 | Flush the oil circuit. |
| 2 | Fit a new oil filter. |
| 3 | Engine test run. See chap. 12-20-00 section: 8). |
| 4 | Inspect the oil filter once more. |

**Contamination**

**NOTICE** If the oil circuit is contaminated, replace the oil cooler and flush the oil circuit.
See chap. 12-20-00 section: 13). Detailed inspection of affected engine components.

Trace the cause and remedy.

**Graphic** Inspecting the magnetic plug.

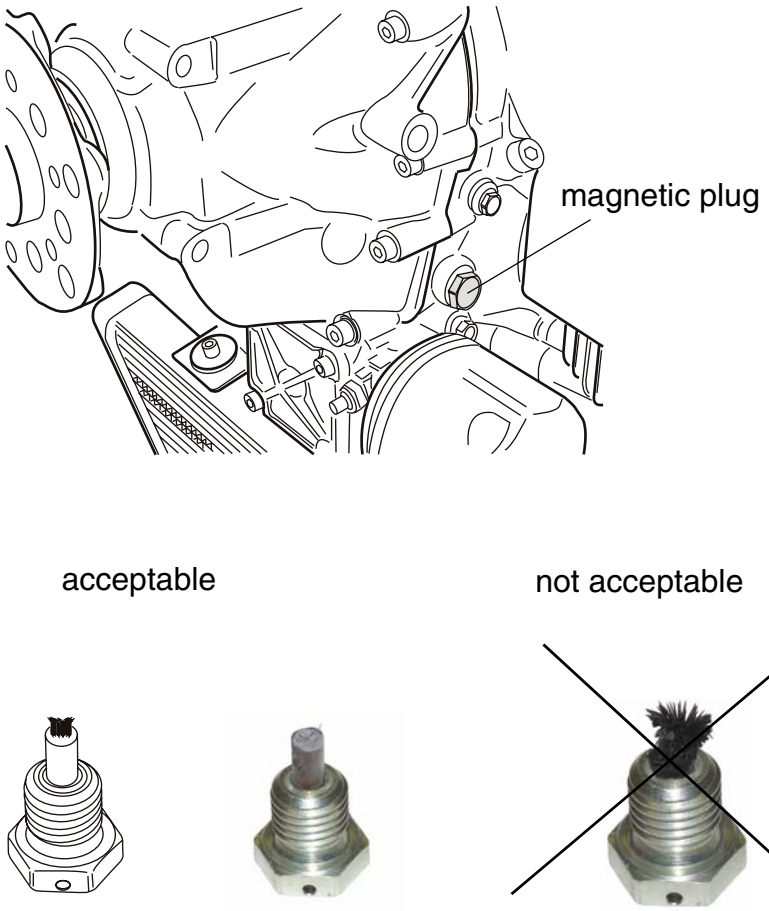


*Fig. 28* *08565,08566,08564,08563*

## 12.1) Installation of the magnetic plug

**Install** The following steps are necessary:

| Step | Procedure |
|---|---|
| 1 | Clean the magnetic plug. |
| 2 | Refit the magnetic plug. Tightening torque 25 Nm (18.5 ft.lb). |
| 3 | Safety wire the plug. |

Inspect all system for correct function. Detailed inspection of affected engine components.

## 13) Flushing the oil circuit

**General note**

**⚠WARNING** Risk of electric shock!
Switch off ignition and remove key! Disconnect negative terminal of aircraft battery.

**Oil lines**

Dismantle and flush oil lines as per instructions of the aircraft manufacturer.

**Oil tank**

Clean the oil tank.

**Temporary oil lines**

Temporary oil lines (only for flushing) must be fitted so that the oil cooler is not connected. The return line is routed into a separate, clean receptacle and not back to the oil tank.

NOTES: Otherwise, metal chips could penetrate the radiator or oil tank during flushing.

**Filling**

Fill the oil tank with approx. 3 l (0.8 gal (US)) of engine oil.

**Procedure**

The following steps have to be carried out after refilling:

***NOTICE*** The oil level in the tank must not drop below the end of suction pipe, otherwise air will be sucked in again.

| Step | Procedure |
|---|---|
| 1 | Turn engine by hand in direction of engine rotation to return the oil from the oil from the oil tank into the engine and into the collection container. The procedure is complete when no more contamination can be discovered. |
| 2 | Control the oil captured during the rinsing process. The rinsing process is complete when no more contamination can be discovered. |
| 3 | Install cleaned oil lines and oil cooler according to the manufacturers instruction. |
| 4 | Install new oil filter and refill with oil. |

Reconnect negative terminal of aircraft battery.

Purging of the oil system, see chap. 12-20-00 section: 11.7).

**Equipment**

***NOTICE*** Inspect all the equipment in accordance with the Maintenance Manual of the aircraft manufacturer.

NOTES

## 14) Electric system

### Overview

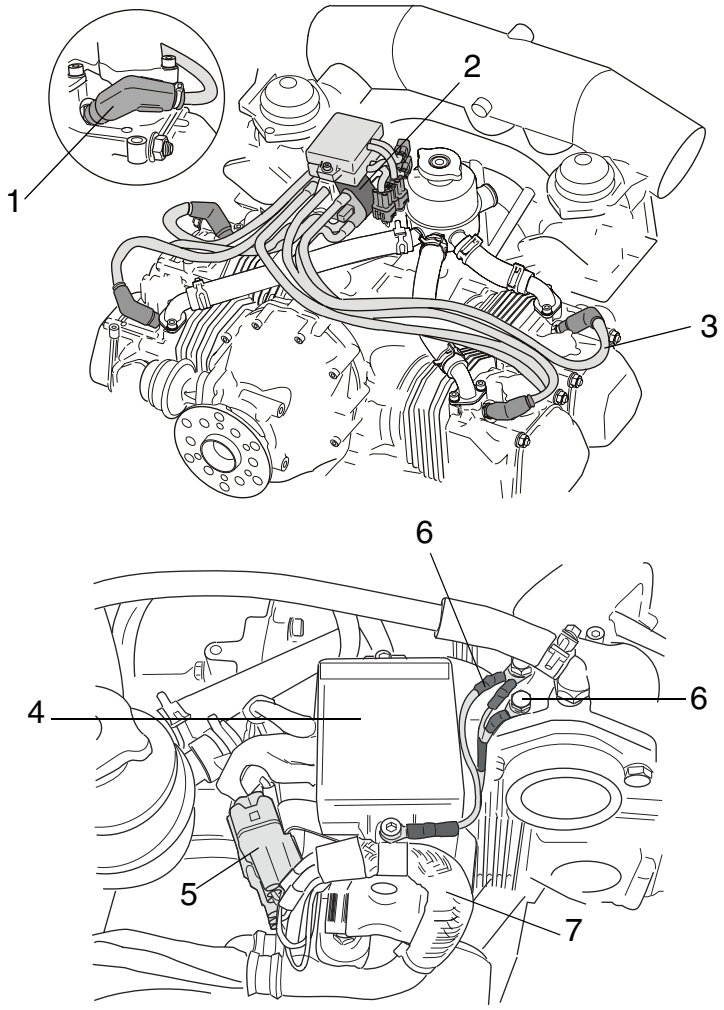


| Part | Function |
|---|---|
| 1 | Spark plug connectors |
| 2 | Dual ignition coil |
| 3 | Ignition cable |
| 4 | Electronic module |
| 5 | Plug connectors |
| 6 | Grounding cable |
| 7 | Protection hose |

*Fig. 29* *08552,08553*

*d02880.fm*

## 14.1) Check of wiring

**General note**

**⚠WARNING** Risk of electric shock!
Switch off ignition and remove key!

**⚠WARNING** Risk of Burns!
Hot engine parts!
Always allow engine to cool down to ambient temperature before start of any work.

**Procedure**

The following steps have to be carried out:

| Step | Procedure |
|---|---|
| 1 | Inspect all cable connectors and their connections for tight fit, good contact, corrosion or damage and replace as necessary. |
| 2 | Inspect all ground connections for corrosion and damage, replace if necessary. |
| 3 | Inspect plug connections between pick-up cable, electronic module, charging and shorting cables for corrosion or damage and replace as required. |
| 4 | Inspect plug connections between electronic module and ignition coils for corrosion or damage and replace if necessary. |
| 5 | Verify plug connections of alternator cables with rectifier-regulator and connections of all cables on rectifier-regulator for good contact, tight fit, corrosion or damage and replace if necessary. |
| 6 | Inspect grounding cables for tight fit, corrosion or damage and replace if necessary. |
| 7 | Verify shielding of cable assemblies for corrosion or damage, good ground contact and tight fit, inspect the attachment of the shielding and replace if necessary. |
| 8 | Inspect all 8 ignition cables to spark plug connector for corrosion or damage and tight fit and replace if necessary. |

## 14.2) Inspection and replacement of spark plugs

**General note**

See Fig. 30.

**NOTICE** Use of incorrect spark plugs can result in ignition problems and pre-ignition and consequent engine damage. See chap. 05-50-00 section: 3.8).

Because of the differing thermal load, particular spark plugs have been specified for each engine type.

In numerous tests the best possible heat range has been determined to make sure that the spark plug will burn off deposits but will not overheat.

**Renewal intervals**

NOTES: Operation with leaded fuels (e.g. AVGAS 100LL) can result in increased wear of the spark plugs. Reduce renewal intervals accordingly.

**Special tool**

Ensure that the following spark plugs corresponding to engine type are employed and that the correct spark plug socket is used:

| Engine | Part no. | Designation | Size of socket |
|---|---|---|---|
| 912 A/F/UL | 897255 | DCPR 7E | 16 mm (0.63 in) |
| 912 S/ULS | 297940 | DCPR 8E | 16 mm (0.63 in) |

### 14.2.1) Remove the spark plugs

**Remove**

Remove the spark plugs and store them according to cylinder and position. Always replace both spark plugs of a cylinder and do not interchange spark plugs between cylinders.

### 14.2.2) Inspection of spark plugs

**Heat range**

Check heat range and adjust electrode gap correspondingly.

**Visual check**

Inspect all spark plugs for mechanical damage.

**Electrode gap**

| Electrode gap | |
|---|---|
| **New** | **Wear limit** |
| 0,6 - 0,7 mm (0.023 - 0.027 in) | 0,9 mm (0.035 in) |

NOTES: Inspect the electrode gap also on use of new spark plugs. The distance can changed by improper handling.

**Spark plug face**

Spark plug face reveals the following about the operating condition of the engine:

| Spark plug face | Information |
|---|---|
| **light coloured to brown** | plug and calibration of the engine are correct |
| **velvet black** | Indicates the following:<br>- mixture too rich<br>- insufficient air intake (clogged air filter)<br>- engine operating temperature too low |
| **oily, glossy coating** | Indicates the following:<br>- damaged valve stem seal<br>- misfiring<br>- too much oil in combustion chamber<br>- worn cylinder and piston rings |
| **white with formation of melt beads** | Indicates the following:<br>- mixture too lean<br>- leaking valves |

### 14.2.3) Installation of spark plug

**Cleaning**

**⚠WARNING** Eyes and skin irritation!
Rinse off with water in the case of contact with eyes or skin. May be harmful if swallowed.

Before every installation, the spark plug thread and the spark plug seat at the cylinder head should be cleaned (e.g. to remove residue of heat conduction compound).

**Installation**

***NOTICE*** Always replace both spark plugs of a cylinder and do not interchange spark plugs between cylinders.

***NOTICE*** Heat conduction compound at the ground electrode (1) or the head area (2) can lead to ignition problems. Apply heat conduction compound sparingly and do not apply to the first three threads.

Apply small amount of heat conduction compound to spark plug thread and tighten spark plug to 20 Nm (177 in.lb) on the **cold** engine.

**Graphic**

spark plugs

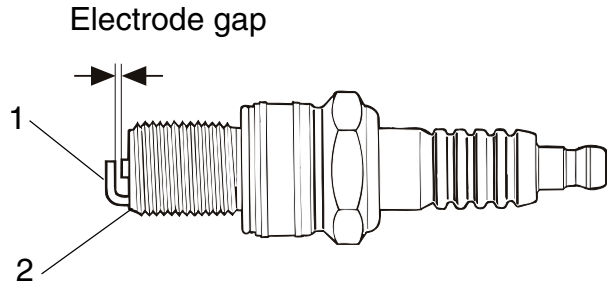


| Part | Function |
|---|---|
| 1 | Ground electrode |
| 2 | Head area |

*Fig. 30* *00086*

d02880.fm

NOTES

## 15) Propeller gearbox

**General note**

NOTES: The following “free rotation check“ and “friction torque check“ are necessary only on engines with the overload clutch as optional extra.

**Engine without the overload clutch**

Engines without the overload clutch (slipper clutch) have no free rotation.

For this reason the friction torque method cannot be applied on engines without overload clutch.

### 15.1) Checking the friction torque in free rotation

**General note**

See Fig. 31.

**⚠WARNING** Risk of electric shock!
Switch off ignition and remove key! Disconnect negative terminal of aircraft battery.

**Test procedure**

The following steps are necessary for the testing procedure:

| Step | Procedure |
|---|---|
| 1 | Fit the crankshaft locking pin. See chap. 12-20-00 section: 7). |
| 2 | With the crankshaft locked, the propeller can be turned by hand 15 or 30 degrees depending on the profile of the dog gears installed.<br>This is the maximum amount of movement allowed by the dog gears in the torsional shock absorption unit. |
| 3 | Turn the propeller by hand back and forth between ramps, taking into consideration the friction torque. No odd noises or irregular resistance must be noticeable during this moment. |
| 4 | Attach a calibrated spring scale to the propeller in distance (L) from the center of the propeller. Measure the force required to pull the propeller through the 15 or 30 degree range of free rotation. |
| 5 | Calculate friction torque (Nm) by multiplying the force (N) obtained on the spring scale by the distance the scale is attached from the center of the propeller (L).<br>The friction torque must be between 30 Nm and max. 60 Nm (22 to 44.3 ft.lb).<br>See calculation example.<br>***NOTICE*** If the above mentioned friction torque is not achieved, inspect, repair or overhaul the gearbox in accordance with the ROTAX instructions for continued airworthiness. |
| 6 | Remove crankshaft locking pin. See chap. 12-20-00 section: 7). |

**Graphic** Checking the friction torque.

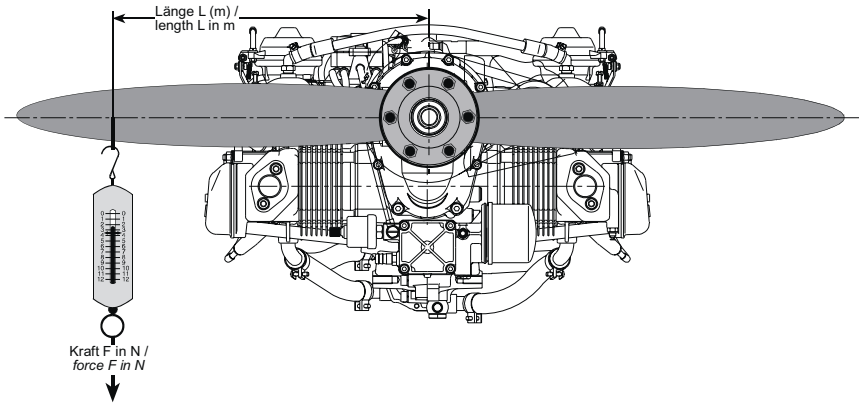


*Fig. 31* *05694*

## 15.2) Checking the propeller gearbox

**General note**

The gearbox must be inspected, repaired or overhauled in accordance with the BRP-Powertrain instructions for continued airworthiness.

Detailed inspection of the affected gearbox components in accordance chap. 72-00-00 section: 3.9) in the Heavy Maintenance Manual.

Crack testing of the propeller shaft is not normally planned, but can be carried out if cracks are suspected.

NOTES

ROTAX®
AIRCRAFT ENGINES

PRIBYL | HEINDL WERBEAGENTUR

Motornummer / Engine serial no.

Flugzeugtype / Type of aircraft

Flugzeugkennzeichen / Aircraft registration no.

ROTAX® Vertriebspartner ROTAX® authorized distributor

**www.rotax-aircraft-engines.com**